Chester W. Nimitz Senior High School

Team 2

ROV: Nicolette

Team Leaders: Davonnas Berrios and Andre Grant

Edgardo Navarro, Kevin Diosdado, Gabriela Sanchez

Advisor: Gary Rodgers

Table of Content

Abstract

The Chester W. Nimitz Team 2 built an ROV to compete in the 2010 MATE competition. Our goals include 1. Going to Hawaii, 2.completely redesigning the ROV, and 3. Gaining teamwork skills that will help us in or future endeavors. To achieve these goals, we first decided on a frame that could hold all the necessary parts needed to complete the missions, yet was not too bulky or heavy. After we made our decision, we improved our motors to raise thrust so we could complete missions faster. To complete the missions assigned, three appendages were added to the robot. The claw picks up and/or moves objects, the temp probe takes temperature readings underwater, and the agar vacuum is used to “absorb” agar. In order to see how to move the ROV underwater, two cameras were added. The added weight of these appendages make the ROV negatively buoyant, so boogie board pieces were added to achieve neutral buoyancy. With the help of the added parts and the perseverance of the team, we will achieve our goals.

Frame Design

Early this year we decided to change the design of the ROV as compared to the one from last year. We used UHMW High-modulus Polyethylene because of the different factors that make it superior to last year's polyvinyl pipes. These included the fact that the material has a density of .95, making it almost neutral buoyant. The UHMW also machines, taps, and threads easily. Many ideas came in mind as to how the frame would look, but we decided to go with a usual hollow rectangular design because it leaves plenty of space to put different parts onto the robot and because we didn't want the ROV to be too heavy. The frame also has boogie board foam added to make it neutral buoyant after parts have been added. The UHMW was given to us by Greg Gonsolvez from ABM Industries Incorporated.

Height: 25.4 cm

Width: 30.84 cm

Length: 40.64 cm

Tether Length: about 15 meters

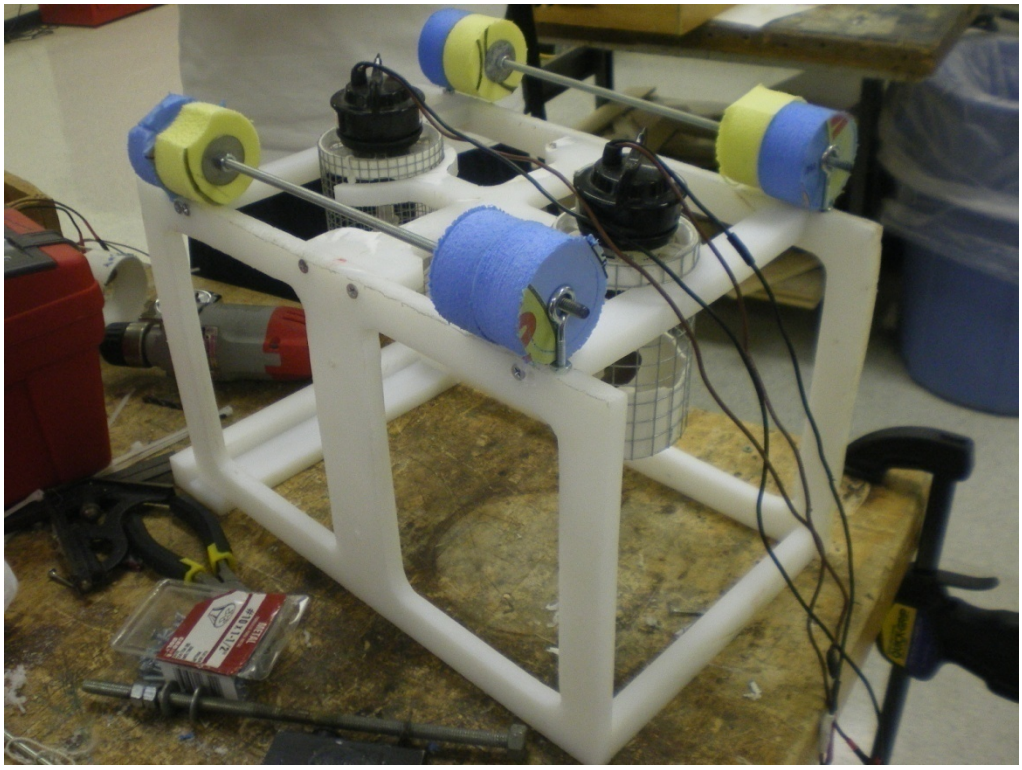

Propulsion System

The propulsion system consists of four motors: two vertical motors and one on the right and left sides of the robot. The side motors are used to pivot, move forward, and reverse.

On last year's design, all four motors were able to achieve an average of 500 gph. This year, we replaced two of those motors with 1100 gph motors. The two vertical motors are the ones that were replaced because it takes more thrust to move up and down. To measure whether or not these motors were superior to last years, we ran tests on the motors that measured the thrust. The results are as follows:

Motor	Forward Thrust	Reverse Thrust
Original 500 gph	.52 kg	.25 kg
New(with new housing) 1100 gph	.80 kg	.34 kg

Another thing that was changed was the design of the housing. We cut out all of the center area of the housing to increase water intake, therefore increasing thrust.

Motor	Forward Thrust	Reverse Thrust
1100gph with original housing	.54 kg	.32 kg
1100gph with new housing	.8 kg	.34 kg

Other parts of the motor include chicken wire and a motor screen machined out of Plexiglas. The Plexiglass was machined using an Expert Mill and the motor are secured with screws.

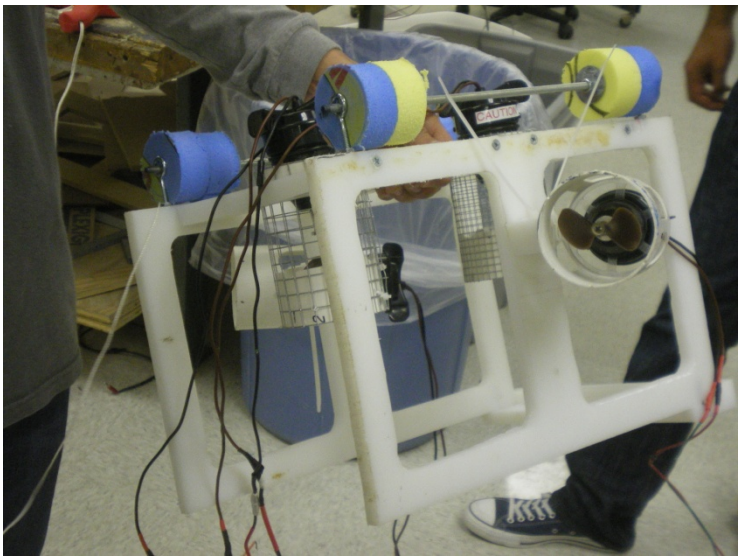

Robot

Pneumatics Systems

Claw

In order to complete missions such as Resurrect HUGO, we needed a tool that could open and close, be used repeatedly, and that would be easy to control. The claw can do all these things. The claw is made of UHML High-modulus Polyethylene, drawn out on inventor, and machined with a CNC. The claw is controlled by a dual cycle air piston pneumatics system. The air flow is controlled by switches on the control box.

Agar Vacuum

The agar vacuum is used to suck up the agar for the mission **Sample a microbial mat.** It is run with a dual cycle air piston pneumatics system, which receives air from the air tank. The golf ball in it acts as a check valve. The agar vacuum is controlled by switches on the control box.

Temperature Probe

The temp probe is encased by a thin wall sink drain pipe to help position it correctly on the chimneys. The readings of the temp probe are taken using a CBL-2, which sends the data to be read to a scientific calculator, the Ti-84.

Hydrophone

The hydrophone is used to detected vibrations in the water. A piece of a cd is hot glued to the end of the hydrophone to keep the water out, although not disturbing the hydrophones ability to detect sound. The line has heat shrink running along it to water proof the cable. To actually hear the vibrations the line is connected to speakers.

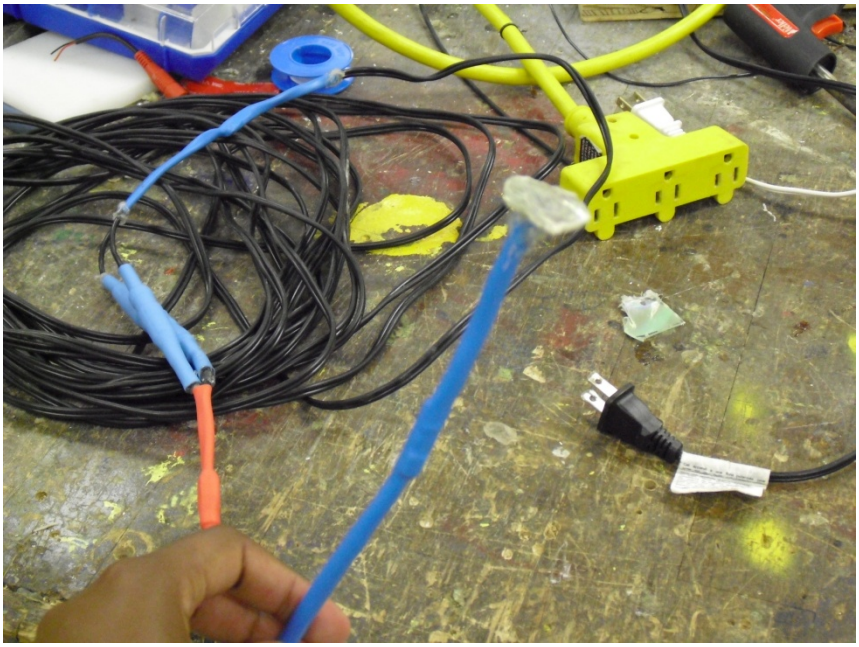

Buoyancy System

Even though the ROV is almost neutral buoyant, the added materials needed to complete the missions made it heavy, causing the motor to have to do more work in order to the get the robot to move around and causing it to sink. To make the robot neutral buoyant, we added Boogie Board pieces to the robot. The pieces are circular and run along the length of the robot; they are held together using all-thread.

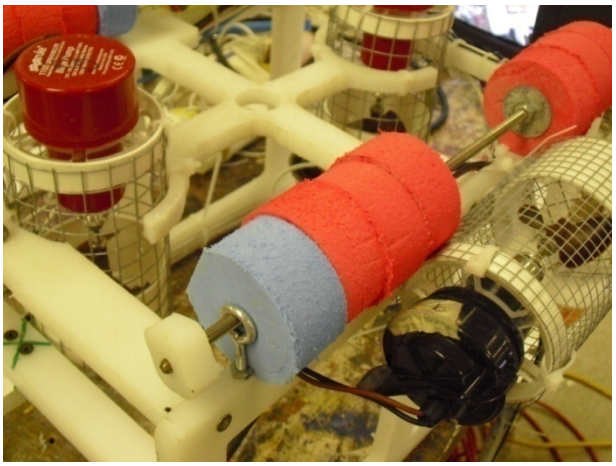

Camera

The ROV has two Sony CCD cameras positioned on spots that are crucial to successfully completing the missions. The front camera is positioned to view the claws, which are needed to pick up and move objects, and the sucker, which is needed to “suck-up” the agar. It is stationed the second camera is positioned to view what is in front of the robot and is stationed on the back-left side of the robot. Each camera has a 3.6 mm lens and is sealed with J.B. Weld epoxy so water doesn’t get in and cause damage.

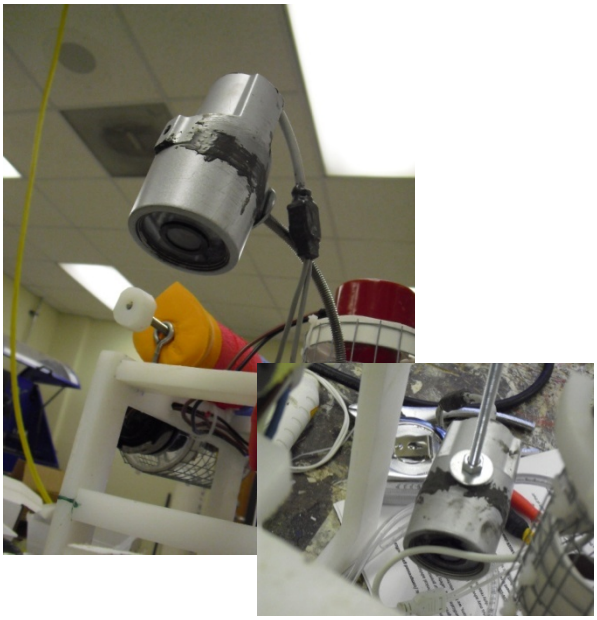

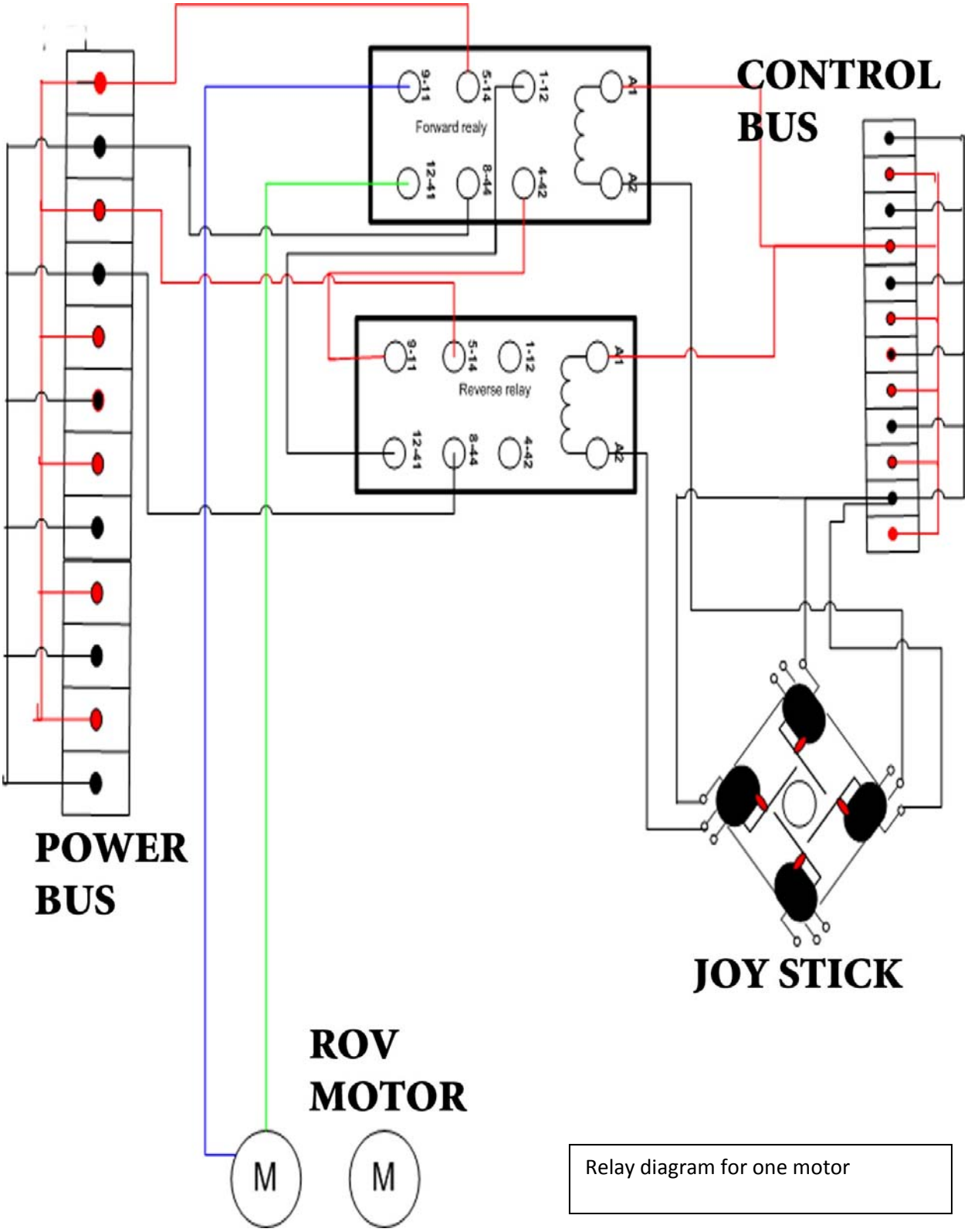

Relay diagram for one motor

Challenges

The first challenge we faced was deciding on the design of the frame. Many members of the team had great ideas, but we had to pick something that was simple, yet sturdy; small, yet firm. Finally, after much disagreement, we decided to use a hollow, rectangular prism shaped frame.

The cameras are a very important part of the robot, but only when they work. During preliminary testing, the cameras kept leaking water, rendering them useless for future use. To solve this problem, team members took apart the cameras, outlined it with J.D. Weld epoxy, put the camera back together, and let it dry. Epoxy was also put on the cord to keep water from going through the end of the camera. Doing this saved our cameras.

Troubleshooting Techniques

The cameras of the ROV had a problem with leaking. To solve this problem, many different materials were used to try to make the cameras waterproof. In the end epoxy was the best choice.

Skills Gained

Teamwork: Not one of us on this team could have completed the tasks required to build the ROV in time for the MATE competition. The ideas of the teammates helped make this ROV the great piece of technology it is today.

Simple Technology Skills: As we worked on this ROV, we learned new skills that pertain to building. These new skills include: learning how to use solder, how to use Inventor to design the ROV, and how use tools such as ban saws.

Budget Sheet

Donated	**Recycled**	**Expenses**	**Total**
UHMW	2- 500 GPH pumps	2 cameras	207. 89
2- 1100 GPH pumps	3 ft_2 Plexiglas	Recorder	45.22
Monitor	Spiral wrap	(10) 50 ft. 18 gauge wire	45.03
3 Kick Boards	3 inch PVC	2 Mollusks connecter	3.99
plywood	3 toggle switches	2 joy sticks	21.52
Power surge	1 Camera	8 relays	37.33
nuts	Fuse holder	solder	5.99
washers	12 volt battery	I squeeze bottle	.99
Self taping screws		Air hoses	26.55
Air tank		microphone	7.89
CBL 2		Temp. probe	18.22
TI- 84 plus		Heat shrink	18.47
Speakers			
Total			$439.09

Acknowledgements

Gary Rodgers-Mentor

Aldine School District

Chester W. Nimitz High School

AISD Problem Solving in Technology Class

AMB Industries Incorporated