Team Seawolf Robotics

ROV Dirigo

Technical Report

Explorer Class

Joe Gatozzi, David Moore, Lisa Dix, Chris Conley, Maan Hani, Rachel Champoux, Jason Kenosky, Nate Margeson
Faculty Avisor: Dr. Charles Gregory

2010

Abstract For the second year in a row, the Seawolf Robotics ROV Team will participate in the annual International MATE ROV Competition; this year held at the University of Hawaii in Hilo. The competition's theme is based on research conducted on an active undersea volcano off the coast of Hawaii, the Loihi seamount. There are four competition missions relating to the actual research at Loihi that the team must accomplish, including the retrieval of biological samples, resurrecting HUGO (a junction box that serves as a hub providing power and communications), taking seismic and temperature readings and plotting the results. With three returning team members, and five new students added to the roster, Team Seawolf Robotics is tackling this year's project with a new design capable of handling the specific mission tasks; including a haptic device to control the manipulator and a frame comprised of high-density polyethylene plates that fit together like a jig-saw puzzle.

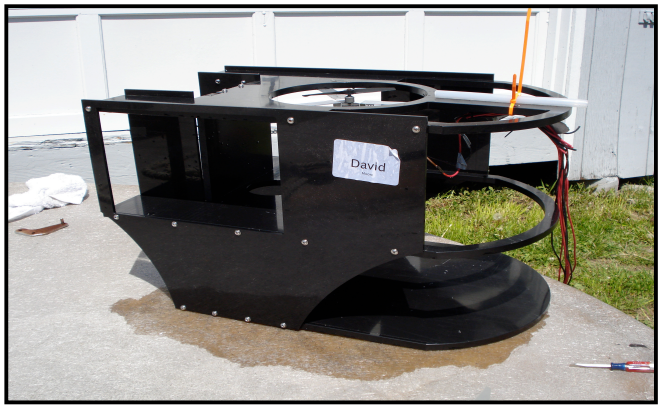

Figure 1. ROV Dirigo

Table of Contents

Introduction/Rationale

Dirigo **di·ri·go** \ˈdē-ri-ˌgō\ Latin for *I Lead*, the official motto of the State of Maine. Team members felt the name fitting -being representatives of Maine, and being the crew initiating Seawolf Robotics with the specific idea of helping to establish Southern Maine Community College as a regular participant in MATE ROV competitions, leading the way for future team members to represent SMCC.

The main concept behind this year's design was to keep the ROV simple, functional, and yet have the ability to be easily modified by future teams to accomadate new mission tasks. This was accomplished by having eight high-density polyethylene plates machined in such a manner that allows the plates to fit together much like a puzzle. This design gives the frame strength and the ability to adapt to new configerations.

Thrusters

Four (4) of the thrusters used on *Dirigo* were retived from last year's ROV *URSULA.* The thursters are Sea Sense 1100 GPH bilge pumps that have been modified by removing the caps and internal propellor, exposing the shafts allowing 2" R/C propellors to be attached directly to the shaft. These four thursters mount to the frame by means of 1 1/2" to ¾" PVC T-adapters at 45° angles forward and aft, providing forward, reverse, and left/right movement.

Ascending and descending motion is accomplished by one (1) Rule 2000 GPH bilge pump that has been modified in the same manner as the four side thrusters. A 6" prop has been added to the this thurster to provide maximum lift ability.

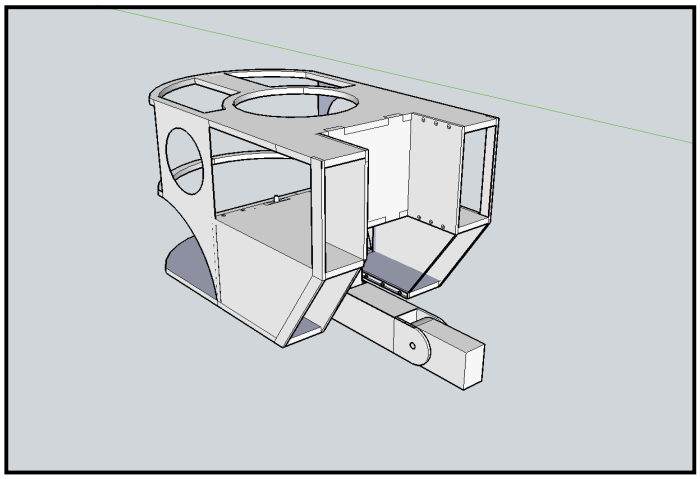

Figure 2. Conceptual image using Google Sketch-up.

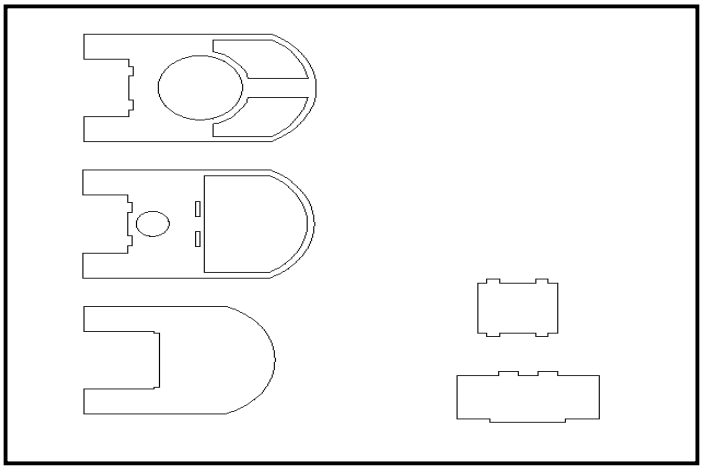

Figure 3. Conceptual image of frame plates, showing five of eight.

Tether

Last year's tether proved to be heavy and difficult to manage; for this year a lighter, more flexible, design was used. A 50' Cat 5e is the main cable running the length that supplies the power to the entire ROV. Six 50' 18 gauge wires and four 50' 24 gauge wires accompany the Cat 5e. These other wires serve to supply back-up power to the thrusters and cameras, respectively, if the main system fails. The set-up is encased inside a 48' x 1" diameter nylon sheath.

Cameras

Lights Camera Action donated the main camera, model LCA-7700-CW, which is a

high quality, consistant performance underwater camera. This is the main forward camera, providing a wide-angle view of forward facing operations. The LCA-7700-CW is equipped with six (6) internal white LEDs and has a dedicated video/power lead that feeds directly into the surface control system.

Three encased circuit-board cameras, one facing aft for reverse manuvering, and two set-up for stereoscopic viewing of the manipulator arm fill out the accompaniment of cameras. The stereoscopic arrangement is fed into a pair of MyVu Shades 301 that will be worn by the co-pilot, providing a three-dimensional view of the mission tasks.

Manipulator

The manipulator arm is constructed of aluminum tubing purchased from Lynxmotion and contains 5 degrees of freedom plus one end-affector. Hi-Tec 645MG waterproofed servos give the arm its functionality and seven (7) servos are placed at each point of articulation:

1) Vertical movement
2) Horizontal movement
3) Rotation of the claw

The amount of freedom will allow the arm to reach any point within a 360˚ radius of half-sphere at maximum reach of 16.54 cm from the forward-most section of the frame. Additional waterproofing will be applied to the Hi-Tec servos by applying an application of an exterior sealant before mounting inside the body of each segment of the manipulator arm. Gears mounted on each segment will interface with the servos to move each segment. A Phidget Advanced Servo Controller inside the Control Box controls each Hi-Tech servo.

Control System

The main control box implements an Acer brand laptop running the 32 bit (x86) version Windows Vista Home Premium operating system. Video is routed to an Acer 15.4 inch wide screen LCD monitor via VGA output. Camera input to the computer is handled by a StarTech SVID2USB2 USB 2.0 Video Capture Cable which allows us to use our main camera as if it was a standard webcam. Controllers include a 3 Axis + Throttle Saitek USB joystick, our own homebrew haptic controller, and a Logitech USB Optical Mouse.

Atlantic wolfish (*Anarhichas lupus*), also known as the **Seawolf**.

Command and Control Software

Dirigo's command and control program was developed using Microsoft Visual Studio 2008 Professional Edition. It is comprised of roughly 500 lines of code, making use of open source library Allegro for GUI functionality. In terms of interfacing with *Dirigo's* controllers (the joystick, the haptic device, and the mouse) the program uses version 7 of Microsoft's DirectX's DirectInput via a simple wrapper. DirectInput was chosen for its powerful and flexible interfacing abilities, and its ability to list the capabilities of varied devices. For instance, the haptic controller is read by DirectInput as a six-axis joystick. This simplifies the process of reading the controller's states. The program also includes several predefined motions ("macros") for various parts of the missions. An example of this would be our "retrieval macro" which automatically places anything which is in the arm's gripper into our specimen basket. Although fully functional, software will be further developed and tweaked into a newer version of DirectInput and including image processing via OpenCV.

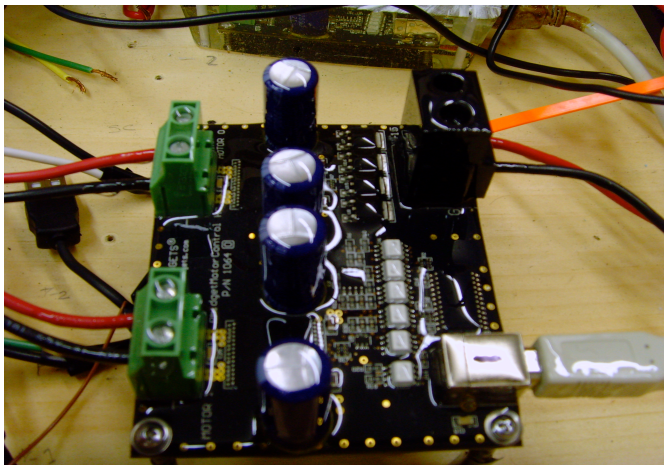

Figure 8. Phidget controller.

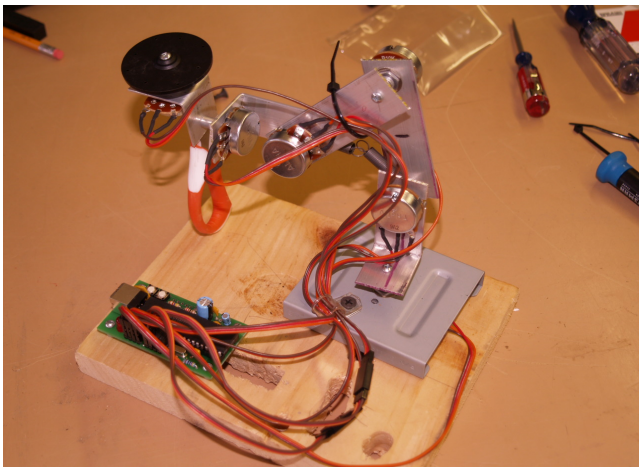

Figure 9. Haptic control device.

Haptic Control Device

The controller for the robotic arm is a haptic interface controller. It is constructed out of six (6) 10K potentiometers from Endurance R/C. The potentiometers are connected to an Endurance R/C AnalogReader. Segments of the controller are made from 1/8"x1" aluminum and scaled to ½ the size of the actual arm. When calibrated correctly, the arm's movement and position will be an exact reflection of the haptic controller. The arm controller has complete control of the robotic arm in a logical manner, compared to a traditional joystick that would not be as logical and fluent to use. The end effector on the arm is controlled by a potentiometer on the haptic controller that has a wheel attached to it. The driver uses his or her thumb to control the position of the manipulator. This design is meant to maximize the dexterity of the arm for picking up small and delicate objects.

Stereoscopic Vision

The stereoscopic vision is designed to give the wearer a sense of depth perception. A pair of MyVu Shades 301 are worn by the pilot of the arm in order to give superior control and special recognition while recovering samples and manipulating the arm. It is constructed of two High Resolution Micro Cameras from Super Circuits and a customized pair of MyVu Shades 301. To

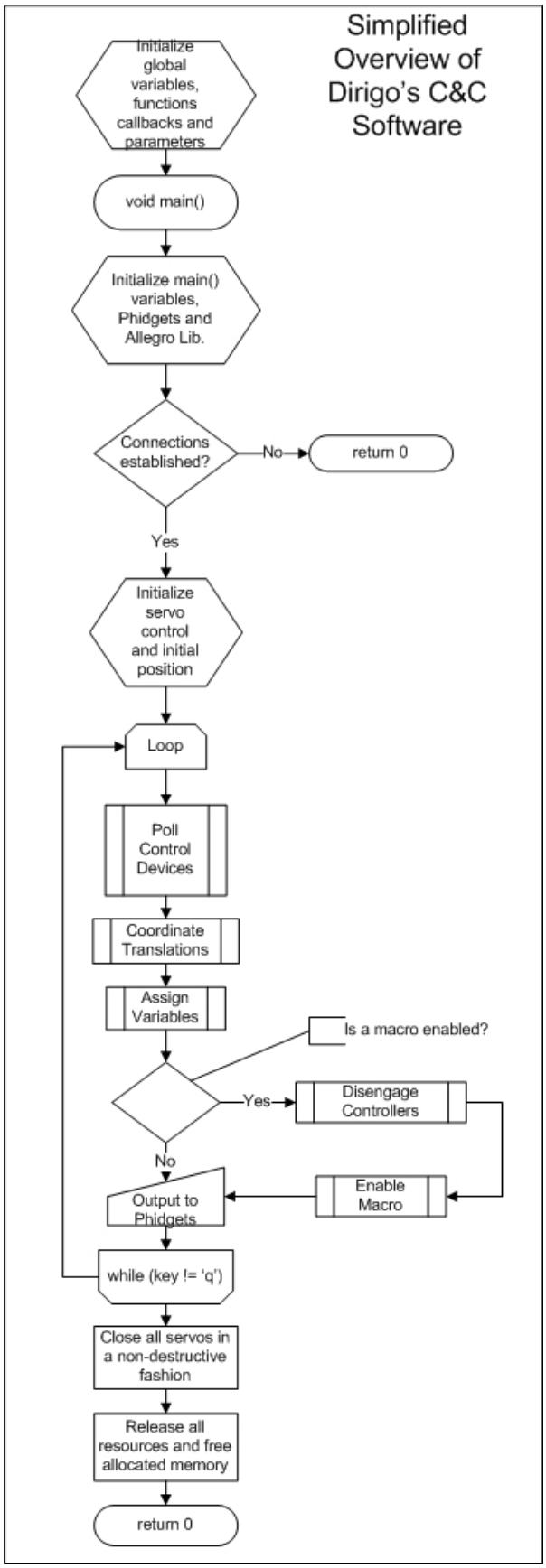

Figure 10. Software flowchart

achieve the goal of three dimensions, the two cameras are positioned at eye width (approximately 6.5 cm) apart on a pan/tilt assembly. The cameras are separately potted in EnviroTex Lite two part epoxy resin. An adjustment screw runs between the two blocks of resin to accommodate different distances between the various widths of people's eyes.

One camera represents the left eye, one the right. Video feeds are sent through the tether on 24ga wires directly to the MyVu Shades. The Shades are worn just like a pair of glasses. Inside each side is a mini LCD screen, one for each eye. The left camera displays on the left mini LCD screen,

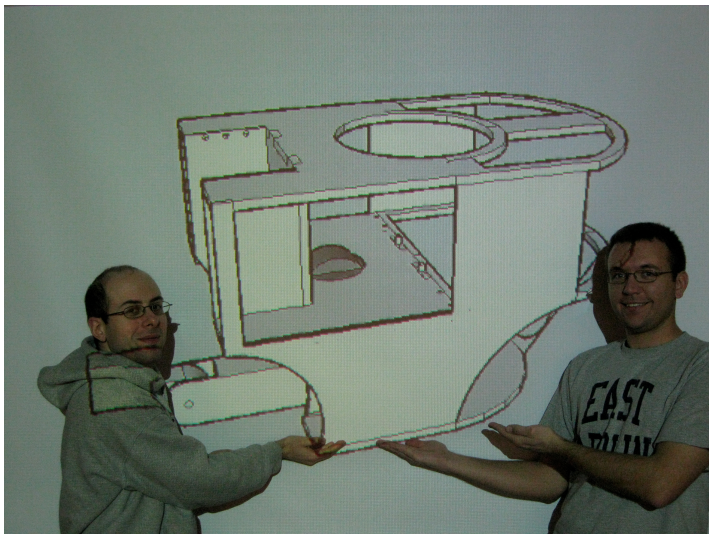

Joe Gattozzi and David Moore holding a conceptual design.

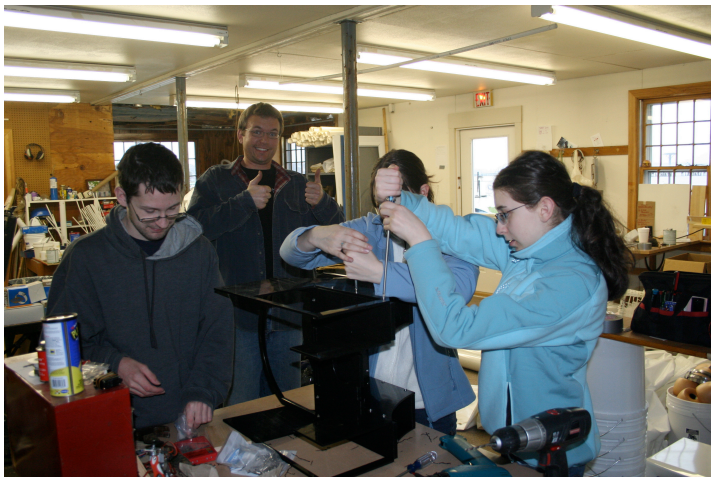

Team members in the shop assempling the frame.

Electrical Schematic

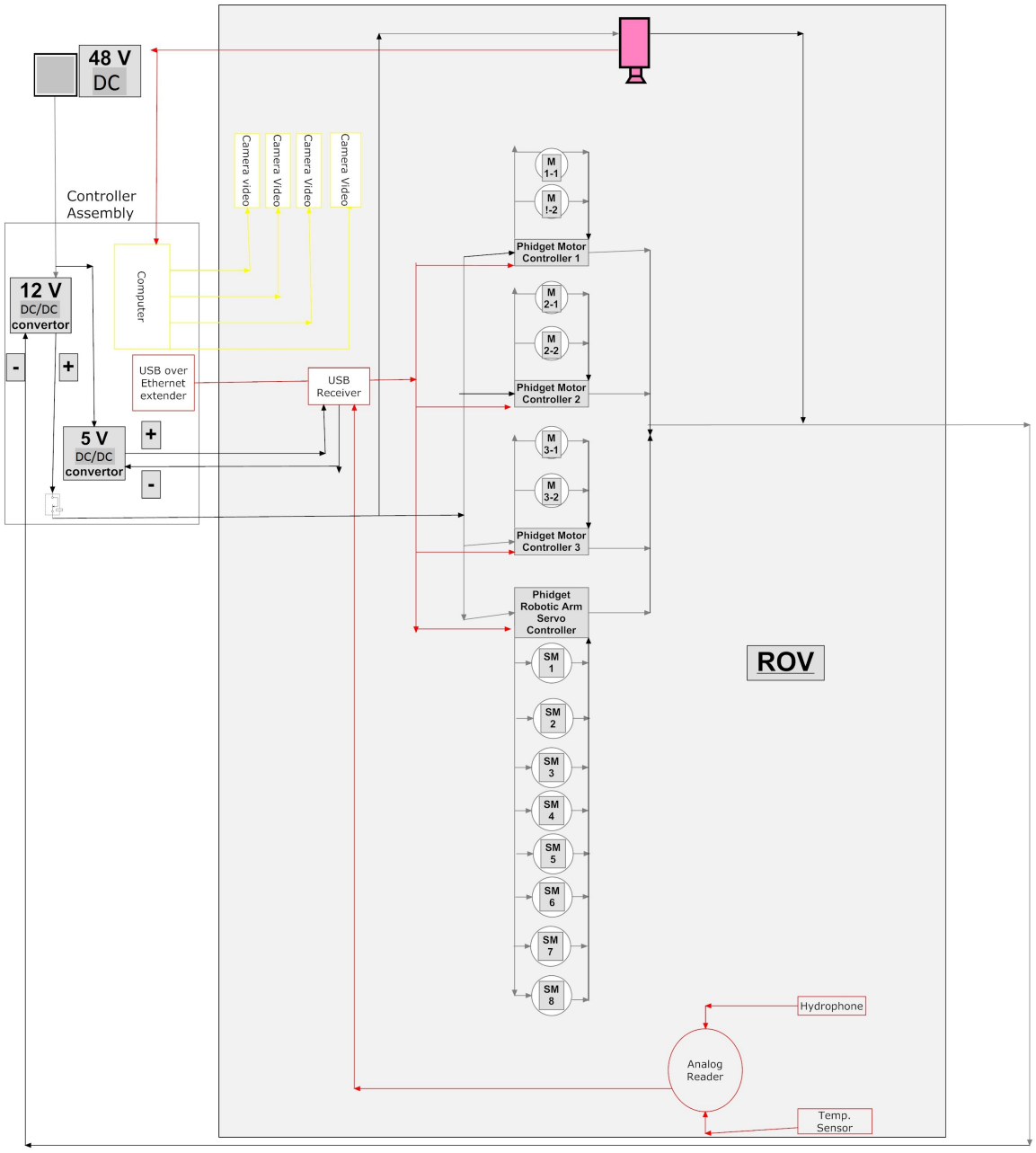

Derigo
Prepared by:
Seawolves robotics

Cat-5e / USB cables

24 gage Camera Wires

18 gage wires

Mission Tasks

There are four (4) mission tasks to complete. These include:

- Resurecting Hugo
- Collect biological sample of new crustacean species
- Sample thermal vent site
- Collect a bacteria mat sample

Five missions will be allotted to set-up and deployment of ROV, 15 minutes devoted to completing the mission tasks, and an additional five minutes allowed for retrival of ROV, any gear used pool-side, and exiting the control shack.

Mission 1, Resurecting HUGO

HUGO is a submersed junction box used by the research vessel to communicate and send power to underwater equipment. It also has an elevator that can raise and lower equipment. In this mission, HUGO has been damaged, and our ROV has been sent down to repair it. The specific tasks for this includes:

- Remove two pins from the HRH (high-rate hydrophone)
- Remove the HRH to a postion that is not in contact with the elevator
- Identify which of three (3) sites is rumbling
- Determine frequency of rumbling within 200Hz
- Insert the HRH into the site of rumbling
- Remove cap from the port on HUGOs junction box
- Retrive the HRH power/communications connector from the holster
- Insert the HRH power/communications connector into HUGOs junction port

Mission 2, Collecting Biological Sample

In this mission, the collection of up to three samples of a new species of crustacean from a cave are collected and returned to the surface. Specific mission tasks are:

- Enter the cave so that the ROV is completely emersed
- Manuver to the back wall of the cave
- Collect up to three samples of the new crustacean species
- Manuver out of the cave
- Return the biological samples to the surface

Mission 3, Sampling a Thermal Vent

Undersea thermal vents are located at the Loihi seamount. In this mission, the task is to take temperature readings from three different locations on the thermal vent and plot the readings on a graph.

- Take three temperature readings (in Celcius) along the length of the vent
- Plot the temperatures on a graph versus the height at location taken
- Collect a sample of the vent spire
- Return vent spire sample to the surface

Mission 4, Sampling a Bacteria Mat

This mission simulates the discovery and retrival of a potentially new bacteria living near the thermal vents. The task is to retrive a sample and return it to the surface.

- Collect a sample of the bacteria mat that is between 25 mL and 225 mL
- Return the sample to the surface

Team Roster

David Moore, *Applied Marine Biology*. May 2010 Lead Construction. Currently pursing a marine technician/ROV related job.

Joe Gatozzi, *Applied Marine Biology.* May 2010 Design, construction.

Jason Kenosky, *Applied Marine Biology.* May 2010 Construction, communications. Currently in the process of transferring to Suffolk.

Lisa Dix, *Liberal Arts,* May 2012 Graphic design and communications

Chris Conley, *Computer Tech,* May 2010 Programming, design. Is in the process of transferring to Worcester Polytechnique Institute

Nate Margeson, *Computer Tech*, May 2011 Constuction.

Maan Hani, *Liberal Arts,* May 2011 Programming, Constuction

Rachel Champoux, *Liberal Studies* concentration in *Math/Computer Technology* May 2012 Fund raising, logistics, and shop support.

Reflections

Rachel Champoux

"Though this is my first year on SMCC's Seawolf robotics team, I have learned invaluable lessons in such a short amount of time. In being a part of this project, I had the opportunity to hone my skills and learn new ones -- in the process, learning about myself and which fields of study interest me the most. There are a few skills that stand out in my mind. First, understanding the terminology that is used in these types of projects. When I first joined the team, everything sounded like a foreign language to me, but after months of listening to it, I find myself able to understand most of it. The second skill I learned is how to work with a group – before this project, I had never worked with team outside of the classroom. Finally, learned how to balance this project with the other things I had going on in my life – schoolwork, other extra curricular activities, and, of course, family."

Joe Gattozzi

"Last year when the ROV team was formed I wanted to join but I couldn't dedicate the time needed for the team. When the chance arose again for this year I dove right into it head first. I figured that this is going to be my last semester at the college so why not give something back and have a little fun in the process. Why did I choose to be president? Well it was either because I didn't show up for

the meeting and the voted me without me knowing or no one else wanted to job so I stepped up to the challenge. Either way I am glad for the opportunity. I learned a lot in a leader ship role. Keeping people motivated and focused on the tasks at hand was the most important factors of guiding the team. When the new team was formed there where a lot of great ideas that could have been used, but it all came down in the end to choosing the most practical and doable ideas for the ROV. "

David Moore
"This has been an exciting year to participate in the MATE competition. I learned a great deal about ROVs from last year's competition and it was fun and challenging to build on that knowledge. Last year began as a fun project to work on as it pertained to my Applied Marine Biology and Oceanography degree, but it has turned into a desire to pursue working with ROVs as a career.

The missions this year are much more technically involved than last year in terms of the equipment we need to develop and build to complete them. I added a lot to my knowledge of underwater acoustics, waterproofing techniques, specimen collection and overall design. It was a fun adding new team members to the club and getting them involved and excited about ROV technology. I am now planning to search out technology programs that will allow me to further my knowledge and experience with ROVs."

Christopher Conley
"This is the second year that I have been involved in the MATE competition since we founded our team at Southern Maine Community College. Although the framework of the competition is the same, I have found myself learning new lessons and growing as an individual. Although I can count among those lessons skills and techniques relating to the construction of a mechanical system as well as project management, the lessons I value the most are those of an interpersonal nature; foremost among them is what a group of dedicated people can accomplish when they believe in something. Each and every one of us has a piece of ourselves invested in this project, and it shows in the results. We are doing the near impossible: creating something from nothing, in a limited amount of time and with a limited set of resources. What we have undertaken as a team is incredible. I would also like to add that I am constantly humbled by my team-mates. Their dedication, hard work and willingness to learn never ceases to amaze me. Truly, they set a golden standard to follow and I am proud to be counted among their number. However I think the greatest thing that I have gained in joining this team is a set of friends I will remember the rest for the rest of my life as Southern Maine Community College's Seawolf Robotics team. *Go Seawolves!*"

Nate Margenson
"I was recruited during the fall by my friend Chris Conley who did it last year. My role was basically learning, I will be graduating this year with an associates degree in Computer Technology, but will be staying to take electives, so I will be on next year's team. I helped design the control module pelican case and was a jack of all trades in helping out where ever helped was needed. I very much enjoyed this project. It was challenging and I loved the entire learning process from the beginning to the end. Learning how the ROV should be designed, figuring out what corporations we should ask donations from and how to get them to help us, and the assembly of the ROV itself. It is an highly valued learning experience. One of my main lesson learned --Marine glue and pelican cases do not mix. There was plenty of challenges faced and overcome, from when a casing cracked to getting funding. Our future plans as always is to do things earlier and stream--

-line things for next year."

Lisa Dix
"I got involved in SMCC's Seawolves Robotics team when it was mentioned in a different club I was involved in. I really wasn't sure how I'd get involved with the club, or if I would enjoy it, but turned out to be surprised. Sadly, I didn't have any background working with robotics or any of the back work required. Most of what I've done for this project was working on the graphic designing, some photography, and helping out when needed. I enjoyed working with the team, and look forward to learning things more in depth so I can be more involved next year."

Future Goals/Improvements
One thing that we need to definitely improve upon in the future is to begin work on the ROV at an earlier date. Even though we initiated design concepts early in the Fall semester of 2009, we did not actually begin building the ROV until March of 2010. The lateness of the project was largely due in part to the donated parts of the frame that were initially constructed in inches instead of our spec that were in centimeters.

Aside from that, the team really came through and burned the midnight oil in order to see this project through until completion. One of the specific goals with this year's project was to have the leaving seniors mentor new members in order to help establish Seawolf Robotics as a regular participant with the MATE ROV competitions.

We are passing along our experience and knowledge in order to see that the project continues on with Southern Maine Community College long after we are gone.

Special Thank-You's to the Following:

MATE

SMCC Foundation

SMCC Student Senate

Hamilton Marine, Portland Maine. Partial donation of 2,000 GPH Rule Bilge Pump

Hannaford's Supermarket, for donation of $15 gift card for raffle

Binga's Wingas, Portland ME. $25 gift card donation for raffle

Margarita's, Portland, ME. Donation of gift cards for raffle

Rivalries Sports Pub and Grill, donation of one week's worth of returnables

National Semiconductor, South Portland, Maine. Donation of $1,000

The Pilot House Pub, Kennebunk, Maine. Bottle donations

The 99 Restaurant, Biddeford, Maine. Bottle donations

Federal Jacks Brewery, Kennebunk, Maine. Bottle donations

Azure Café, Freeport, Maine. Donation of returnables

Plas-Tech, Westbrook, Maine. Donation of frame material and milling parts

Joan DeCosta, Accountant II, SMCC Finance Office

Shane Long, Director of Student Development and Engagement

Tom Long

Brian Tarbox, Assistant Professor, SMCC

Dave Moore, Raytheon Missile Systems, Excalibur Chief Engineer

Budget/Expenses

Southern Maine Community College - Seawolf Robotics						
	Description	# Units	Cost/ea	Total	Supplier	Part Number/Item
	Servos 6 pac	1	$239.94	$239.94	Lynxmotion	
	Robotic Arm	1	$214.35	$214.35	Lynxmotion	
	Standard Ca	2	$30.00	$60.00	Super Circuit	PC212XS
	HiRes Came	2	$50.00	$100.00	Super Circuit	PC72XS
	Frame plastic			$0.00	Donated by Plas-Tech	
	misc screws			$0.00	Donated: Marine Science Shop	
	USB/CAT5 E	1	$55.00	$55.00		
	Phidgets M/	2	$120.00	$240.00	Phidgets, Inc	1064
	Phidget S/C	1	$98.00	$98.00	Phidgets, Inc	1061
	AnalogRead	2	$35.00	$70.00	Endurance R/C	
	Temp probe	2	$5.00	$10.00	Endurance R/C	
	Hydrophone	2	$40.00	$80.00	Radio Shack Parts	
	Potentiomet	7	$5.00	$35.00	Endurance R/C	
	Cat-5e cable	1	$14.52	$14.52	HR Distributors (50 ft cable)	
	Expandable	50	$0.99	$49.50	HR Distributors	
	18" USB A -	3	$4.52	$11.10	HR Distributors	
	MyVu Shade	2	$89.00	$178.00	eBay	
	Props/Servo	1	$51.37	$51.37	Ray&Robins Hobby Shop	
	Servo Wire E	1	$45.15	$45.15	Ray&Robins Hobby Shop	
	Pelican Case	1	$127.00	$127.00	Cases Cases	1560NF
	Polyester Re	1	$13.22	$13.22	AC Moore	Enviro Tex Lite 16oz
	Polyester Re	1	$40.31	$40.31	AC Moore	Enviro Tex Lite 1 Gal.
	Diving Mask	1	$5.25	$5.25	Aqua Diving Academy	
	Acer LCD mc	1	$102.90	$102.90	Wal-Mart	
	Power Conv	1	$150.00	$150.00	Power Stream	
	Cooling Fans	2	$10.00	$20.00	not used on final rig	
	Circuit Break	1	$0.00	$0.00	Reused from 2009 ROV URSULA	
	Plasti Dip 14	1	$9.96	$9.96	Aubuchon H 294066	
	Mineral Oil	1	$28.31	$28.31	CVS Pharmacy	
	BNC-RCA Ad	1	$5.88	$5.88	HR Distributors	
	Misc Hardw	1	$39.12	$39.12	True Value Hardware	
TRAVEL	Airfare	6	$1,142.59	$6,855.54	Travel to Univerity of Hawaii Hilo	
	Lodging	1	$850.00	$850.00	6 Students, Dorm style Hostel	
Advertising	T-Shirts		$150.00	$150.00	Infinity Tees	
	Printing		$100.00	$100.00	Estimated printing costs.	

Parts Total: $2,020.57 **Grand Total $9,726.11**

Donations and Funraising

	National Ser	$1,000
	Federal Jack	Bottles
	Pilot House	Bottles
	Rivalries Spc	Bottles
	Azure Café	Bottles
	The 99 Resta	Bottles
Bottle return total:		$425.40
	SMCC Marin	$1,500
	Raffle	$235
Donations Total:		$3,160.40

REFERENCES

Video Ray $50 Submersible Camera

http://www.marinetech.org/rov_competition/VideoRay%20camera_x10.pdf

Creating Custom Joysticks with the AnalogReader

http://www.endurance-robotics.com/page.aspx?id=4

Society of Robots:

Robot Arm Tutorial http://www.societyofrobots.com/robot_arm_tutorial.shtml

How to Waterproof a Servo
http://www.societyofrobots.com/actuators_waterproof_servo.shtml