Nimitz ROV and Engineering

Nimitz Marine Recovery Unit

Team Members:

Raymundo Berlanga, Felix Molano, Arturo Salazar, Alyssa Snider, Jesus Arista, Pedro Cisneros , Rawley Delgado, Johnathan Funes, Oscar Guardado, Roberto Ramos, Gabriela Sanchez, Jose Trevino, Alejandro Medina, Gustavo Moralez, Michelle Guerrero, Ryan Ramsey.

Instructors: Mr. Rodgers

TABLE OF CONTENTS

Abstract

The team for Gulf Coast ROV and Engineering from Nimitz Senior High School constructed an ROV this year called "The Marine Recovery Unit." This will be our 9th year competing. Every year we set three goals for our team in order to improve our ROV. Our first goal was to have a fully functional ROV by Christmas break. Our second goal was to put our relays underwater. Our third goal was to compete in the international MATE competition. This years ROV is similar to last years design but it contains different parts for this years missions. It took us months of hard work, practice, and failures to complete our ROV. Most of our parts are salvaged from previous years. The only money we spent was on our 3 new motors, and casting epoxy. The total amount of money we spent was about $190. We decided to build a frame that was able to adapt to any conditions that the competition was set forth. The material of our ROV is Ultra High Molecular Weight Polyethylene. Our ROV is 30.48 cm high, 53.34 cm long and 27.94 cm wide. It contains 7 motors of different strength to provide the ROV with vertical and horizontal moving. It contains 5 mission packages in order to complete the tasks of the missions. With the help of the special modifications and the ROV's able bodied team members from Nimitz team Gulf Coast ROV and Engineering we will be able to achieve all of its goals.

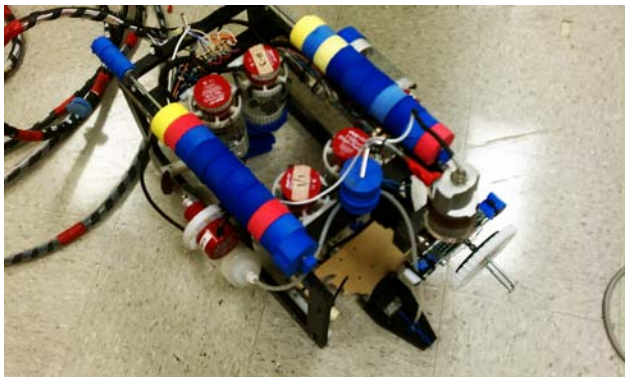

Design Rationale

This year we had to design and construct an ROV to take on similar tasks as those that were necessary to clean up the oil spill that occurred in the Gulf of Mexico. We used Autodesk Inventor to design our different mission packages, like our claw and revolver. Our starting point was the basic frame which we made out of UHMW (Ultra High Molecular Weight Polyethylene). The shape of our robot is a basic box frame because we found through experiences that it is the best style to use and it is easier to add mission packages. Every year we are required to pick up certain objects so we designed a jaw and a mount so we could easily attach it to our robot. We wanted the buoyancy of our robot to be just below 1 so that it will not sink or float. We achieved this buoyancy by using boogie board donuts on top of the robot.

Basic Inventor Drawing of our ROV

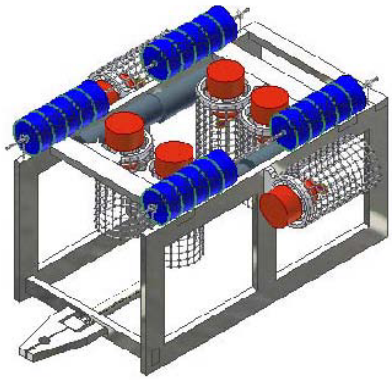

Budget

Our budget for this year was $190. We bought 4 1000 GPH bilge pump motors and casting epoxy. The motors were $40 each and we recycled 3 motors from last years ROV. The casting epoxy was $30. All other materials and equipment were recycled from previous ROVs or salvaged from scrap materials. Our instructor's friend from Galveston donated UHMW (ultra-high-molecular-weight polyethylene) which is used as the frame on our ROV.

Buoyancy

Our team wanted to make the ROV neutrally buoyant, which means that the ROV will not sink to the bottom and it will not float to the top. To achieve this we added donut shaped floats made out of boogie board on top of our ROV. Neutral buoyancy was a constant problem we faced. Each time we added a new mission package we had to continue adding more donuts. The main reason we put the donuts above the center of gravity on our ROV is so it self rides itself.

Challenges

One major challenge for our team was the goal that we set at the beginning of the year, waterproofing our relays. The fist step before anything, was wiring the relays with solder, 18 gauge, and 22 gauge wires. Our first attempt was to fit the wired relay into a sink drain pipe, cover it on both ends with a cap and sealing it with silicon glue. Our failure rate was 100%. The next attempt was to seal the relay itself with silicon and super glue inside of any edges that would endanger it of leaking. Once the relays have been sealed, we tested them for proper function again to be sure they didn't leak glue inside. We then covered the drain pipe on one end and filled the other end with casting epoxy and had a failure rate of 50%. That was enough to get us the four underwater relays we needed.

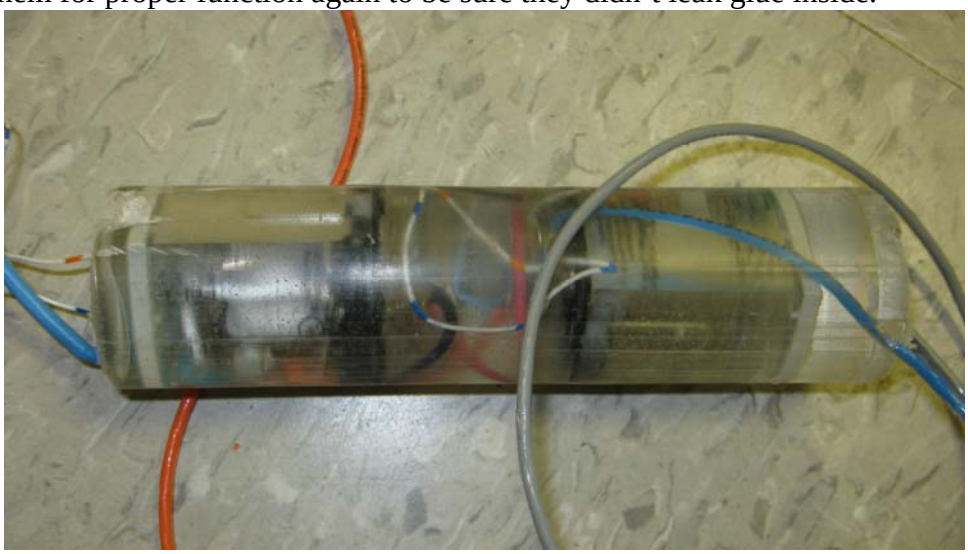

Finished Relay

Frame

Our frame, as shown in the figure below, is made of ultra-high-molecular-weight polyethylene or UHMW. The frame is 51.435 cm long, 28.575 cm wide and 24.765 cm tall. UHMW is a very tough material, but at the same time it is easy to machine with common wood working tools or CNC milling machines. This structure lets us attach appendages for our robot, such as our motor mounts, jaw, gears, and other parts needed to construct for our mission package. What makes UHMW a good material is that it is almost neutrally buoyant; with a density of 0.95 g/cm-3, it also has a coefficient of friction of .005, so it makes a huge difference in the speed and maneuver of our ROV.

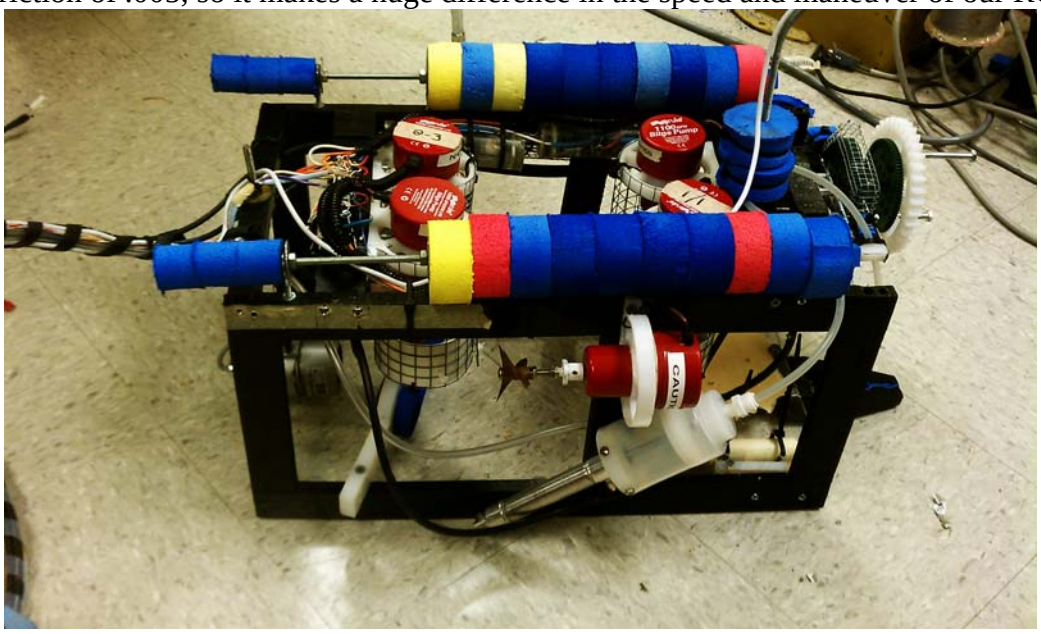

Underwater ROV (side view)

Mission packages

Jaw: The jaw is made out of UHMW material. We first designed it on Autodesk Inventor and cut it out with a band saw. The jaw runs with a dual action piston and our pneumatics system which connects to the air tank on the control box. There are two toggle switches which operate the jaw in order for it to open and close. It is 15.24 cm in length and 8.13 cm in width. This mission package is needed for many of our missions. It helps to pick up and move any object.

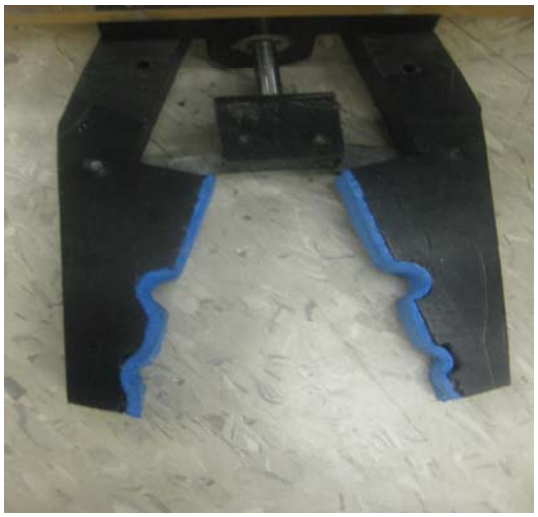

Jaw Open

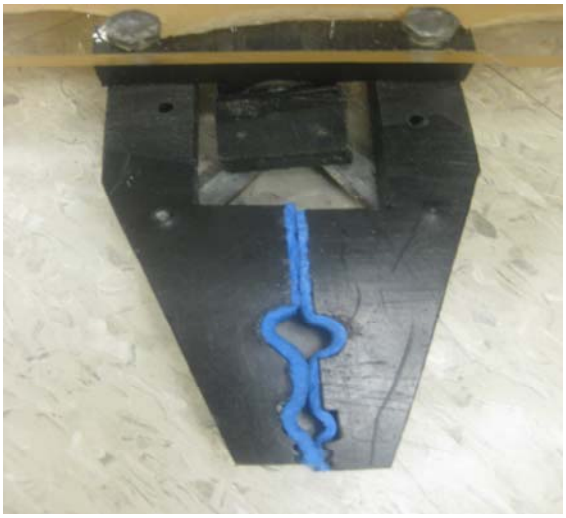

Jaw Closed

Sucker: The sucker is made out of a ketchup bottle that was cut in half. It is 10.16 cm in width. The sucker made just like an injection shot. The ketchup bottle is attach to a plate that we made and the piston shaft goes through the first plate and is attached to a second plate which allows the sample to come in the bottle by vacuum. It also contains a clear tube that goes all the way down to the jaw in order to collect one of the water samples.

Suction Tube

Sucker

Air Cannon: The air cannon is made out of CPVC pipe and works with the pneumatics system. It has an airline attached to it that connects to the control box. It has a diameter of 17 millimeters and it is 25.4 cm in width. The purpose of the air cannon is to shoot a ½ in CPVC probe attached to the messenger line threw the U-bolt on the damaged pipe in mission 1.


17 mm Air Cannon and Projectile

Cameras: There are 2 cameras attached to our ROV. There is one located at the bottom and one on the top. The bottom one to see the interior of the robot and to see what is ahead of us. We have the top camera to see the jaw, gear and the tube from the sucker. The cameras were recyclable from last years ROV so that saved us time because we didn't have to waterproof them again. It was already done last year. We tested the camera and found a crack lens on one and repaired the broken lens by add a Plexiglas disk and gluing it in place using epoxy.


Rear Camera

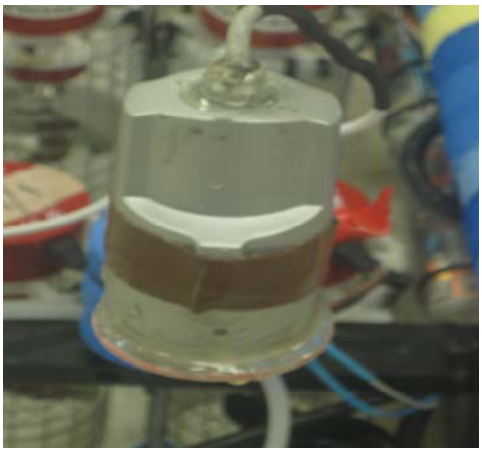
Front Camera

Valve Rotator

Our valve rotator is made up of a vex assembly, a motor, two bolts, a failed prototype gear and ¼“welded wire fabric guard used for safety precautions. The vex assembly consists of six collars, six spacers, three 60-tooth gears, two 12-tooth gears and a chassis rail. Our gear ratio is a 5:1 reduction ratio which was made specifically to overcome the task of rotating the valve. In our prototype we had a 3:1 reduction ratio but it wasn’t producing enough torque to rotate the valve so we stepped it up and moved to a 5:1 reduction ratio which sacrificed speed but added more torque.

Close Up of Gear Assembly

Our valve rotator is powered by a 500 gallon per hour bilge pump motor. The motor goes drives a pair of 12-tooth gears that are joined together, one on top of another, these paired 12-tooth vex gears run a pair of 60-tooth vex gears. This change in gear ratio is what gives us a reduction ratio which turns the failed prototype gear with the two prongs and thus turns the valve.

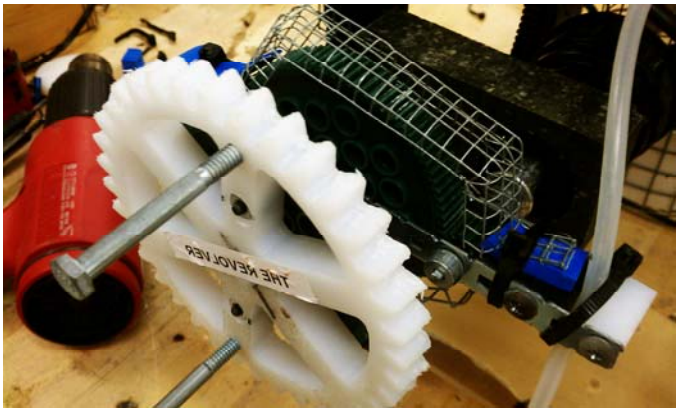

Valve Rotator

UHMW (Ultra-high-molecular-weight polyethylene)

UHMW is a subset of thermoplastic polyethylene. It has extremely long chains, with molecular weight numbering in the millions, usually between 2 and 6 million. The longer chains serve to transfer load more effectively to the polymer backbone by strengthening intermolecular interactions. This method of weight distribution results in a very tough material, with the highest impact strength of any thermoplastic presently made. It is highly resistant to corrosive chemicals, with exception of oxidizing acids. It has extremely low moisture absorption, has a very low coefficient of friction, is self-lubricating, and is highly resistant to abrasion (in some forms, 15 times more resistant to abrasion than carbon steel). (http://en.wikipedia.org/wiki/Wikipedia) The UHMW has a density of .95, almost neutrally buoyant, and a coefficient of friction of .005. It is easily machined with common wood working tools or CNC milling machines. It can be drilled and tapered for mechanical fasteners. It has multiple uses in construction of an ROV. It has made a huge difference in the engineering of our underwater ROVs.

We wish to give special recognition to Greg Gonzalez of Archer-Daniels-Midland, the maintenance supervisor at a large grain exporting terminal in Galveston, TX. Due to the effect of salt air, which is highly abrasive and corrosive, they use UHMW in various locations in the facility. Because of wear and tear damage, they have to periodically replace the UHMW. In the past, they disposed of it in the trash. He now saves the castoff UHMW so we can recycle it. We clean the dirt, grime and even barnacles from the surface and cut it to dimensions that we need. We have black or white which is usually ½ in. UHMW and some that is 2in. material. He has provided enough UHMW to meet all our needs as well as the needs of Aldine High School and Macarthur High School.

Waterproofing Relays Process

One of our main goals this year was to waterproof the relays and put them underwater. This ended up being a little more difficult then we had thought. First we tried to seal the relays in a tube with caps on each end. The seals tended to leak and we abandoned the process in favor of sealing the entire tube with clear casting epoxy. This process worked well except we found we had another problem to overcome. The epoxy leaked into the relays so we had to develop a method of sealing the relays. The following procedures are the final working method.

1. Precut the wires, strip the wire ends and precut the shrink wrap.
2. Tin the ends of the wires and relay pin.
3. Check the wiring diagram and solder the wires to pins on the forward relay.
4. Heats shrink the wire and pin connections to provide electric insulation.
5. Place additional heat shrink on the wires before making the final solder connections.
6. Solder the wires to the correct pins on the reverse relay.
7. Heats shrink the wire and pin connections to provide electric insulation.
8. Place the completed relays in a test stand and test for proper function.
9. (critical) Each relay must be sealed around the bottom and top using either thick supper glue or JB weld. Any amount of the epoxy getting into the relay could cause failure.
10. Cut a 6 in. piece of 1 ¼ in. sink drain pipe.
11. Machine an end cap with holes to allow the wires to pass through.
12. Slide the relays into the tube and set the end cap.
13. Test the relays again for proper function.
14. Seal the end cap with hot glue to stop the epoxy from leaking.
15. Mount the tube vertically in a clamp and fill with clear casting epoxy.
16. Next day, after the epoxy has cured, remove from the clamp and test the relays again for proper function.
17. Remove the tube from around the relays and inspect for voids in the epoxy. Repair with 5 min. epoxy.
18. Install on the ROV and check for proper propeller rotation.

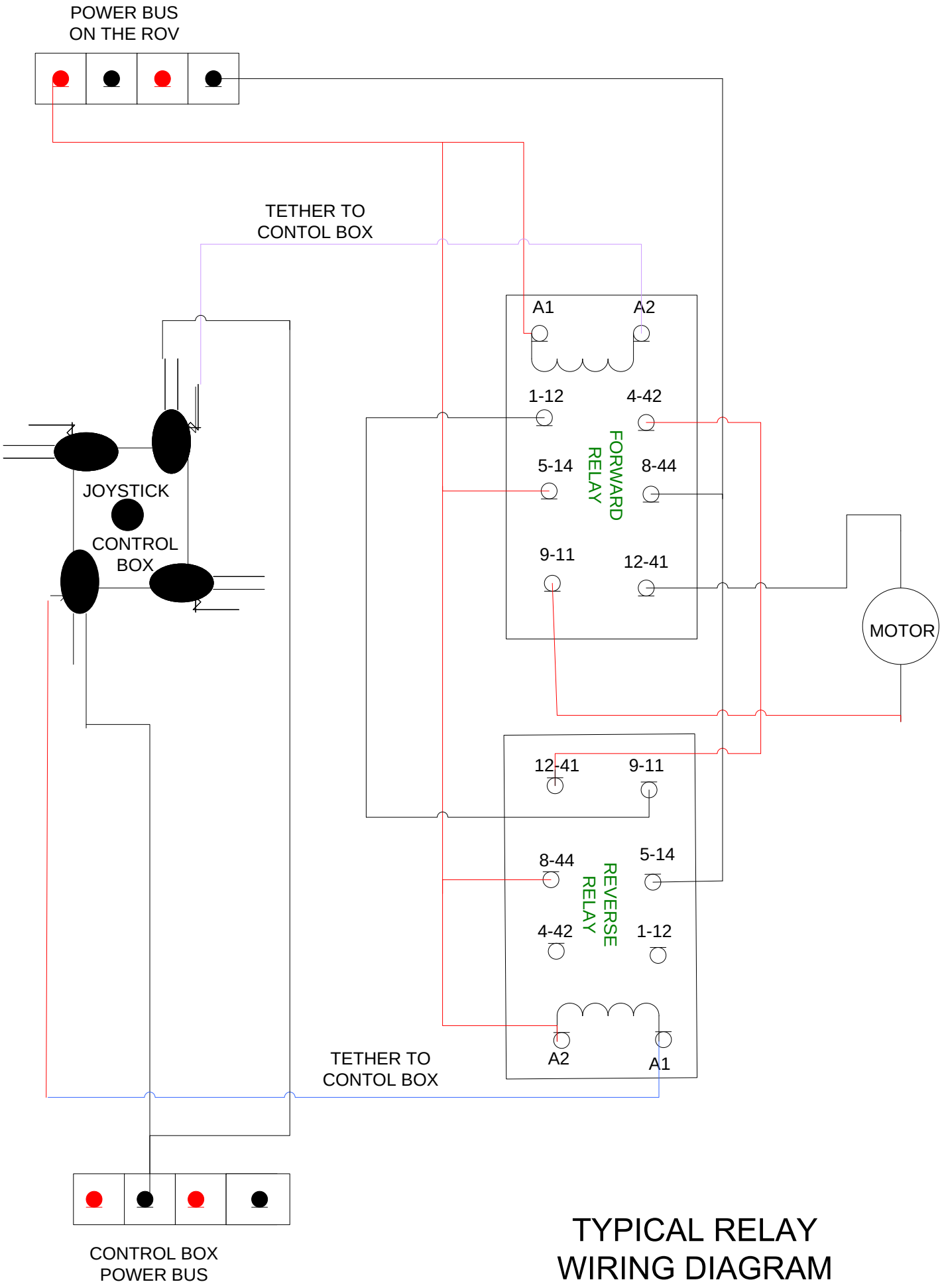

TYPICAL RELAY WIRING DIAGRAM

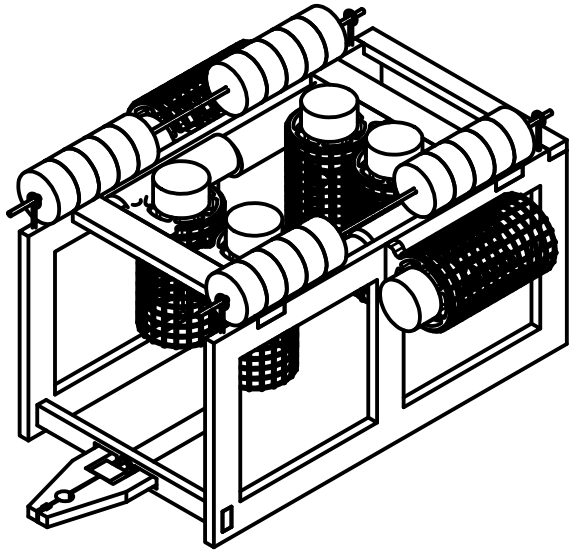

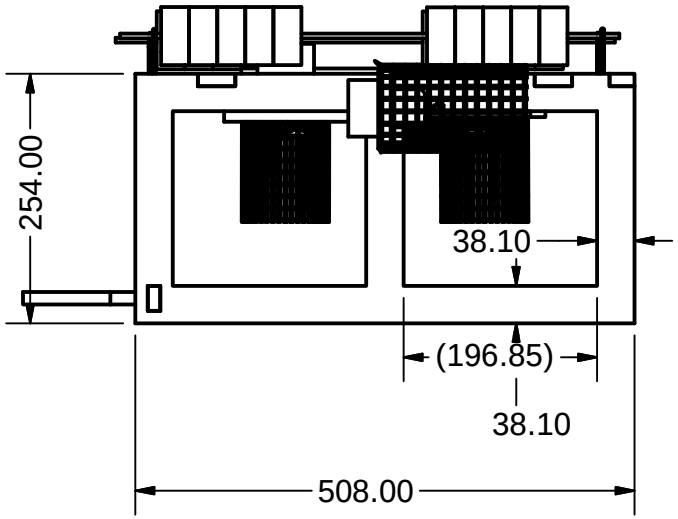

DRAWN	5/13/2011	NATO Under Water Robotics Competition
CHECKED		TITLE
QA		Nimitz Team 1
MFG		
APPROVED		
		SIZE A / DWG NO / REV
		SCALE / SHEET 1 OF 3

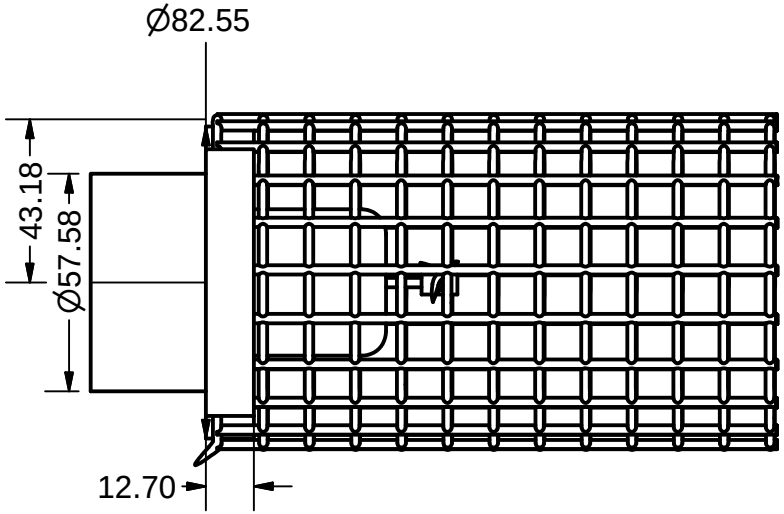

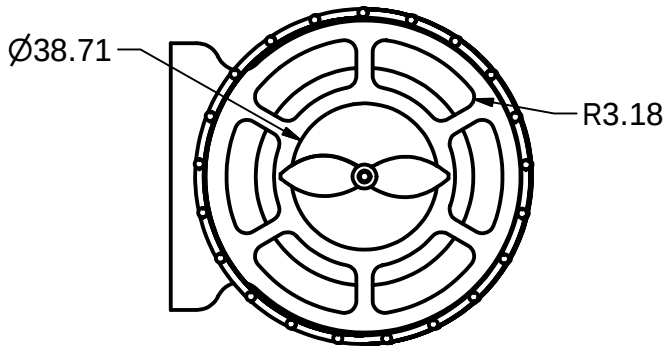

DRAWN	5/13/2011	NATO Under Water Robotics Competition
CHECKED		TITLE
QA		Nimitz Team 1
MFG		
APPROVED		
		SIZE A / DWG NO / REV
		SCALE / SHEET 2 OF 3

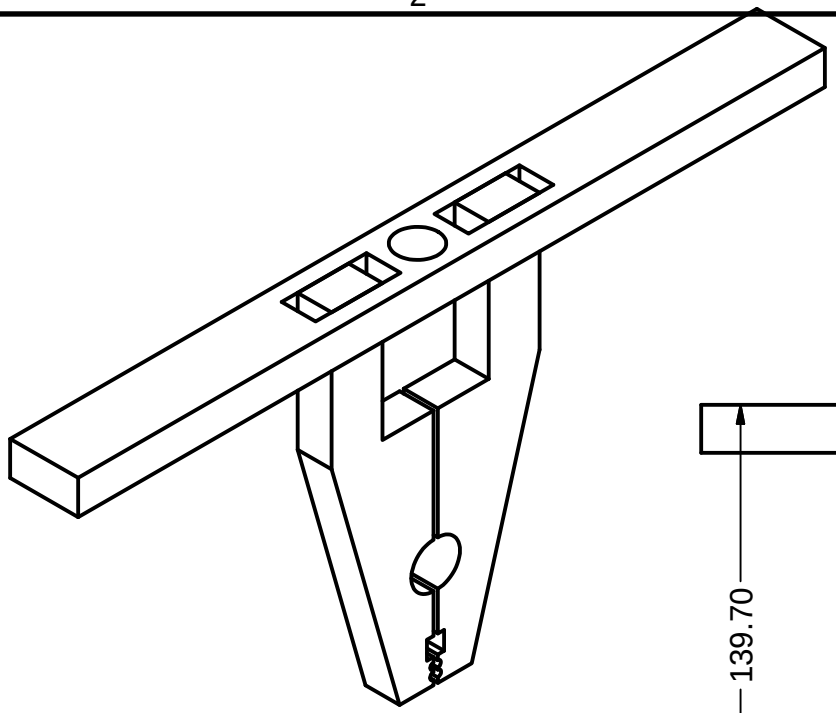

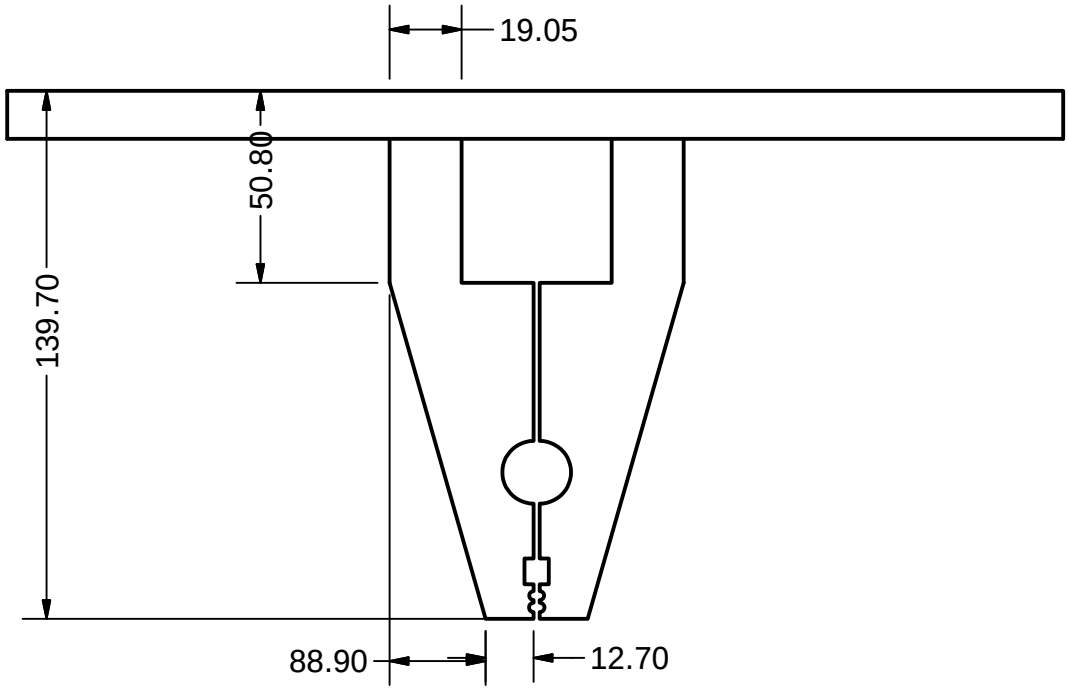

DRAWN	5/13/2011	NATO Under Water Robotics Competition
CHECKED		TITLE
QA		Nimitz Team 1
MFG		
APPROVED		
		SIZE A / DWG NO / REV
		SCALE / SHEET 3 OF 3

Aldine ISD
For providing the funds necessary for this project.

Archer Daniels Midland

Special thanks to Greg Gonsalvez for providing the required materials

National Aeronautics and Space Administration

SolidWorks

For the programs/software that helped us design our R.O.V.

Texas Technology Education

Marine Technology Society of Houston

Special thanks to Marine Society of Houston for our senior's scholarship.

Autodesk Inventor

For the programs/software that helped us design our R.O.V.

Gibbs Cam

For the programs/software that helped us machine our parts through our CNC machine.

WW Diving Company of Humble

Marine Advanced Technology Education Center