Yavapai College Robotics Team

Prescott, AZ, United States
2011 MATE Technical Report

The Otterbot

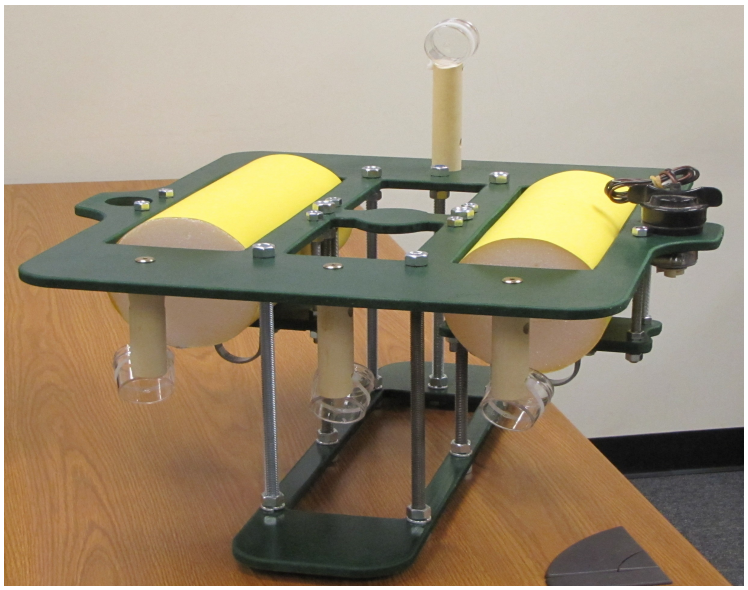

Explorer Class

Rick Peters, Electrical and Instrumentation Instructor, Mentor

Dan Collins	Interface Engineer, Co-Pilot
Sam Eis	CFO
Silvano Flores	Frame Engineer, Pilot
Jay Hogan	Director of Marketing, Tether Wrangler
Mark Hoskins	Software Engineer, Author of Interface Code
Frederick Lloyd	Safety Officer
Liz Peters	CEO, Captain
Tim Pitman	Software Engineer, Co-Author of Interface Code
Tyson Rhodes	Software Engineering Technician

Abstract

The *Otterbot* is a highly maneuverable and flexible remotely operated vehicle (ROV) that was designed to solve an oil spill scenario for the Marine Advanced Technology Education (MATE) International ROV Competition. As a first-time team, our initial goals were to create a flexible, base-line ROV that we could use for future competition. After qualifying, our goals switched focus to designing a modular system of critical components for the *Otterbot* that would be reusable on future ROVs.

The *Otterbot* utilizes pulse width modulation, providing responsive and precise motor control. Three actuators are available: a gripping manipulator, a sample-taking syringe and a well-head cap. The supplied 48V is converted on the ROV through DC-DC converters, ensuring that accurate, stable power is available to all systems at various voltage/current combinations. The frame was designed with SolidWorks software, and refined with wooden mockups. A poolside laptop with a custom C+ interface program converts input data, displays necessary visuals and communicates with the ROV. Our four-camera system, which includes a three-position camera that covers the ROV's actuators and a wide-angle camera, provide the *Otterbot* pilot with extensive views to accomplish a variety of tasks.

The most unique system, designed specifically for the oil spill scenario, is a perfect example of applied physics. Using a mechanical latching system and a valve that closes and seals using the water pressure from the damaged riser pipe, our well-head cap is simple but ultimately effective.

Over all, the *Otterbot* was created through brainstorming, group discussions, and trial-and-error.

Illustration 1: Milling the Water Tight Container for the Frame

Table of Contents

Illustration Index

Illustration 2: The team prepares for Houston!

Design Rationale

Frame

The ROV frame was designed with SolidWorks software, and refined with wooden mockups. The design for the Otterbot's frame was engineered around two water tight containers (WTCs). The WTCs house the two DC-DC converters and all necessary computer hardware and sensors. Due to the large amount of heat that will be produced inside the WTC, a unanimous decision was made to use twoWTCs to minimize overheating and maximize the surface area exposed to the water to encourage a heat-sink effect. The initial idea for using a PVC cylinder for each of the WTC's was quickly dismissed by the club when the calculation for the absolute pressure at maximum depth would be around 2.2 atmospheres (**figure 1**).

$$P_{abs}=P_{atm}+\rho g\Delta h$$

$$P_{atm}=1.013\times105Pa,\ g=9.8ms2,\ \Delta h=12.2m$$

$$P_{abs}=1.013\times105Pa+1000.kgm39.8ms212.2m$$

$$P_{abs}=2.20860\times105Pa = 2.18026\ atm = 32.0411psi$$

Figure 1: Equations and calculations for absolute pressure @ 12.2m, Assuming density of pure water.

Using the difference in pressure from inside the WTC and pressure of the water at maximum depth pushing on the surface area of the WTC, calculations figured close to 2.3 tons of total pressure applied to entire canister. (**figure 2**) A decision was then made to use aluminum cylinders with an outside diameter 5-5/8" (5.625") as the foundation for the WTC's.

$$F_{net}=\Delta P2\pi r2+2\pi rL$$

$$F_{net}=1.18026\,atm\,2\pi 0.0714\,m^2+2\pi 0.0714\,m\,0.3175\,m\,1.013\times 105\,Pa$$

$$F_{net}=20859.5\,N=4656.13\,lbs.,\quad \approx 4.7\times 103\,lbs.\ (2\ sig\ figs.)$$

Figure 2: Calculations determining the amount of force applied to WTC @ max depth.

Buoyancy (upwards force exerted) of the WTCs was then calculated to give an estimate of mass allowed to add to the ROV. (**figure 3**) A slightly positive buoyancy is desired for optimal performance, and as a safety measure for ROV to return to surface on its own power for possible maintenance during operation as no other way of towing the ROV to the surface is permitted. Our goal was to reduce reliance on floats and weights, and to achieve a slight positive buoyancy, as closely as possible, by means of our basic design.

$$F_B=\text{weight of displaced fluid}$$

$$F_B=\rho\ \text{water}\ V\ \text{disp. fluid}\,g$$

$$F_B=1000\ kg\ m\ 3\ \pi\ 0.0714\ m\ 20.3175\ m\ 9.8\ ms\ 2$$

$$F_B=49.83\,N=11.2\,lbs.\ \ (\text{per canister}),\ x2\ \text{canisters}\approx 100.N\approx 22\,lbs$$

Figure 3: calculations of buoyancy of WTCs

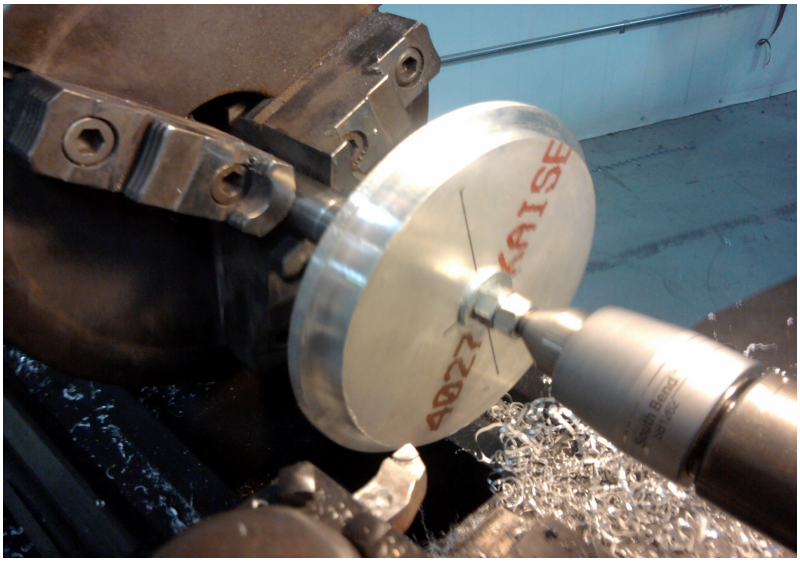

Illustration 3: Milling the WTC Caps

The frame was designed in three parts around the WTCs and underneath, holding manipulators, motors, and other hardware. Aluminum was the initial material of choice due to its high strength while relatively light weight. We decided to use a sheet 24x24x0.5" (approximately 61 x 61 x 1.27 cm), high density plastic as base material for the rest of the frame, opposed to the initial idea of an all-aluminum ROV frame, was made for budget reasons. The weight restrictions the WTC's buoyancy poses on the ROV is solved by the much lighter plastic, which serves as a strong enough material yet reducing the weight of the entire bot, keeping the goal in mind of using as little 'added' buoyancy as possible. For support hardware, aluminum 'all-thread' (3/8" (0.95 cm) for middle frame support, ½" (1.27 cm) for main support) was used. SolidWorks drafting software was used to design the frame of the ROV and determine volume and mass.

Illustration 4: MDF mock-up of Frame Design

The top part of the frame is designed to hold the two WTCs, two 1250 GPH (gallons per hour) bilge pump motors for up and down motion, the wellhead cap mechanism, cameras, and lights. Initial plans for supports along the length were thickened from 2.54 cm to 5 cm providing more strength to the structure where the holes were drilled. This expansion moved the WTCs slightly under the top part of the frame, 'squeezing' the WTC between the top and middle plastic parts, secured with 3/8" 'all-thread', eliminating the need to zip tie the WTC to the frame as previously planned.

Motor Control and Power

The *Otterbot* utilizes pulse width modulation, providing responsive and precise motor control. The supplied 48V is converted on the ROV through DC-DC converters, ensuring that accurate, stable

power is available to all systems at various voltage/current combinations. The system requirements in regards to motor control includes bidirectional, sensitive control of three motors for movement in three dimensions, as well as bidirectional, discreet control of one motor for manipulator control and one pump for water sampling.

By using a combination of H-bridges and two Parallax Stamp modules, the following software design decisions were made to accomplish our motor control goals:

- RS232 Serial Communications are used for communication to and from the Basic Stamp 2 modules
- One Basic Stamp 2 module is used for control of all motors/pumps. It accepts and acts upon serial inputs
- One Basic Stamp 2 module is used to measure depth by transmitting serial outputs through the PC for the pilot interface
- The multimedia library SFML is used for display of information to the pilot, in addition to providing the pilot with a joystick/button controlled interface
- The control interface utilizes two joysticks and three buttons. Joysticks are used to control up/down, left/right, forward/back motion. A button is used to open the manipulator, and another is used to close it. The water pump is controlled via a single button

A poolside laptop with a custom C+ interface program converts input data, displays necessary visuals and communicates with the ROV.

The following steps describe the technical workings of the software.

- Joystick 1 is periodically polled for its x and y axes, which are used to determine the direction and magnitude of motor 1's motion (left motor)
- Joystick 2 is periodically polled for its y axis, which is used to determine the direction and magnitude of motor 2, where motor 2 (right motor)
- Buttons 1 and 2 are periodically polled. If they are both depressed or not depressed, no action is taken. If only Button 1 is depressed, then the manipulator motor is turned counter-clockwise. Otherwise, if only Button 2 is depressed, then the Manipulator motor is turned clockwise.
- Button 3 is periodically polled. If it is depressed then the Pump motor is turned on, and if it is not then the Pump motor is turned off.
- 33 times a second, 5 bytes are delivered from the Laptop to Basic Stamp 2 Module #1.
    - The first byte is equal to 255 in all cases. It's purpose is to ensure that no lack of synchronization between the Basic Stamp 2 Module occurs. The module will wait until it receives a byte equal to this value before it will process the remaining 4 bytes.
    - The second byte contains firstly a 3 bit field, each bit indicating whether it's corresponding motor should go clockwise or counter-clockwise. An additional 2 bit field is used to determine the direction the Manipulator should turn: 0: Don't Turn 1: Clockwise 2: Counterclockwise. A single bit is used to turn the pump on and off, to a total of 6 bits used in the second byte.
    - Bytes 3, 4, and 5 are used to deliver a number 0-254 that indicates the duty cycle of each corresponding motor.
    - Upon reception, the Basic Stamp Module #1 interprets and delivers the appropriate PWM and direction signals to the H-Bridges to cause the appropriate movement in the motor.
- 10 times a second, a single byte is delivered from Basic Stamp 2 Module #2 to the Laptop. This

byte indicates the value returned from the ADC0831 (analog to digital converter), which is proportional to the voltage returned by the MPX5050GP (depth gauge). This number is converted to centimeters for display to the pilot as depth.

Our four-camera system, which includes a three-position camera that covers the ROV's actuators and a wide-angle camera, provide the *Otterbot* pilot with extensive views to accomplish a variety of tasks. Two cameras are positioned on both the right and left of the *Otterbot*, to provide a full range of vision. A 270 degree off-the-shelf camera used to assist in rear view visibility while reversing in a car was used to provide the pilot with a wide-angle view. Lastly, a three-position camera will be moved by a servo motor to provide views of the wellhead cap, the manipulator, and the water sample syringe.

Actuators

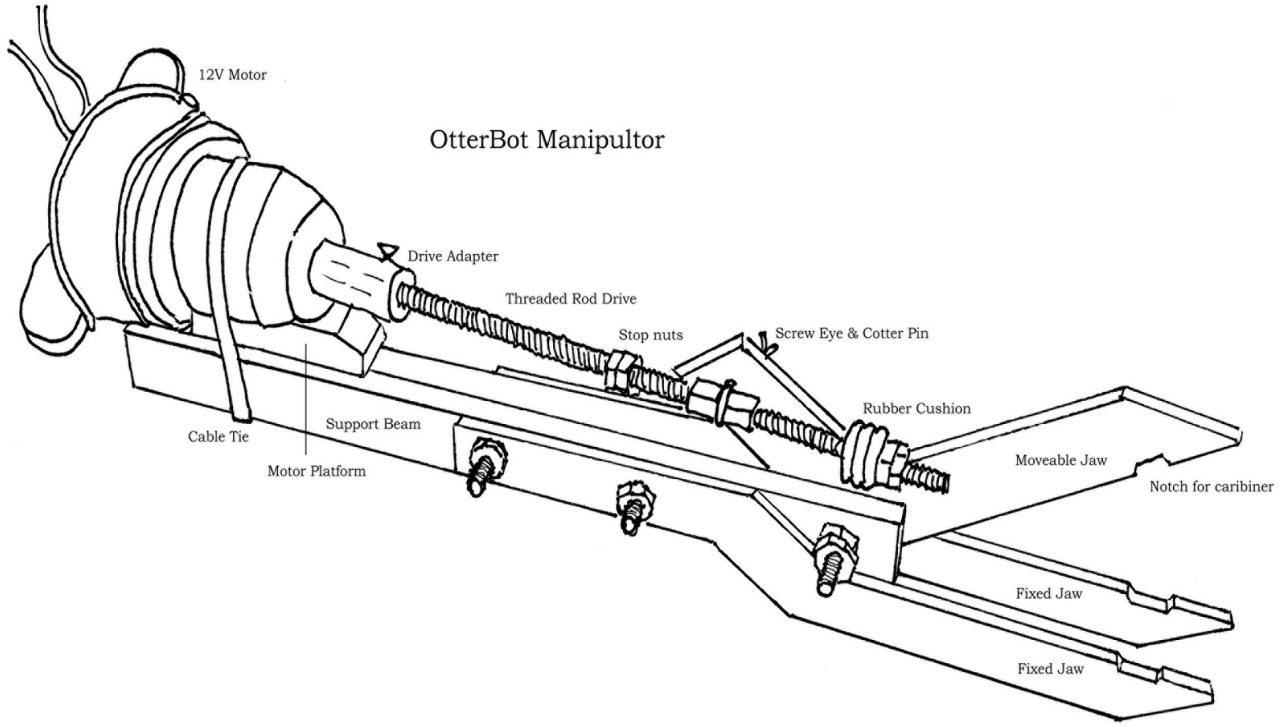

Illustration 5: OtterBot Manipulator

Three actuators are available: a gripping manipulator, a sample-taking syringe and a well-head cap. The main manipulator design is simple but effective. The original design of the manipulator was based on a cable and pulley system. It had two lower stationary fingers and an upper finger on a hinge pin. The concept was very simple. The pulley was mounted on the shaft of a motor, which wound up the cable causing the upper finger to close. When power was removed from the motor a tension spring opened the fingers. The arm of manipulator was 1/2" copper tubing and the fingers were cut from 1/16" aluminum sheeting. The response time of open to close was really the only strong point of this design. It was soon realized that the fingers where too flimsy, the strength of the grip was far too weak to be useful and the motor had to remain energized for the fingers to stay closed, creating issues with current draw. The second design replaces the pulley and cable system with a worm gear configuration. A worm gear is coupled directly to the shaft of the motor and runs through a threaded coupler attached to the upper finger of the manipulator. This design improved the grip strength and removed the problem of holding the fingers closed. It has also created a greater range of motion and variability for opening and closing. The manipulator arm was changed to 3/4" aluminum tubing making it much easier to mount to the ROV, and the fingers were reinforced by laminating layers of aluminum sheeting.

Wellhead Cap

The most unique system, designed specifically for the oil spill scenario, is a perfect example of applied physics. Using a mechanical latching system and a valve that closes and seals using the water pressure from the damaged riser pipe, our well-head cap is simple but ultimately effective.

From the moment the mission details were announced, the Yavapai College Robotics Team began a series of discussions on how to stop the water current flow from the riser pipe. In addition to stopping the current flow, we realized there would be challenges associated with guiding any device into a strong current, especially while the device was altering the flow of the current.

Early on, we believed that a heavy cap would be necessary to help seal off the flow and to give some mass to the object to minimize the buffeting effect of the powerful current. Even so, we were rather uncomfortable with the idea of using a massive cap to shut off the flow. We believed that using sheer weight to stop a leak would be an unreliable, and risky solution. Another solution was needed: Since the riser itself was designed to contain the immense pressure of a functioning oil delivery system, we wanted a way to grasp the riser to ensure a positive lock against the pressure.

Our fist solution to this involved a spring hose clamp (like the ones used on radiator hoses on older cars) that could be grasped by our manipulator. When gripped tightly, the clamp would open, and when released the clamp would close around a rubber hose, locking it onto the riser. This was a step in the right direction. We advanced to the point of working in the direction of eliminating the weight requirement. However, we still didn't feel we had a reliable solution. We didn't want to rely on friction, so we searched for another solution.

One of our team members, John Dibble, came up with an idea of locking onto a physical feature of the riser: the bottom rim of the riser coupling. In fact, he showed up at a club meeting with a spring-loaded device that would slide over the top of the riser and grab the bottom rim of the coupling. At this point though, we still had a buoyancy problem because the cap was solid steel and weighed about 5 pounds. Once we let go of the cap, our ROV would instantly become positively buoyant and we'd ascend to the surface whether we wanted to or not. We still needed to turn off the valve and perform other functions before rising to the surface.

Our second concern was being pushed out of the way by the strong current as we attempted to guide the cap in place. We considered the idea of somehow reducing this resistance of the water flow. The thought was to employ some type of valve that would remain open during installation of the cap, and could be closed with the ROV's manipulator once the cap was locked down.

At first we had planned to use a quarter-turn valve. We ran into problems in that the brass valves used in normal plumbing applications were exceedingly heavy, and the plastic valves were difficult to turn. We resorted to designing our own valve, one that would offer very little resistance to current when open, but would create a positive seal when closed. A butterfly-type valve was thought of because of its lack of resistance. During the design phase, however, we became concerned about any slight off-center shaft might allow the valve to snap shut before the valve could be installed.

At this point our concern about an off-center butterfly shaft turned a light on. Suddenly, several problems were solved at once. Since it was becoming clear at this point that adding rotational capability to our manipulator would require a tremendous amount of time and some risk, it was a possible problem. In assessing the entire mission we determined that the only thing we needed rotational capability for was to close the valve. We intentionally offset the main shaft so the valve would close on it's own. All we had to do was keep it from closing until we released the entire wellhead mechanism. External guide tabs were created to ride in a slot and hold the butterfly open until we piloted the ROV away.

The butterfly valve was built using a short section of 2" ABS pipe and a 1/2" hole drilled through it, located off-center. An aluminum shaft was designed to hold the butterfly plate into place and allow it to move from an open position to the completely closed and sealed position. There is a sealing ring that was custom made by casting silicone in wax. It fits inside the 2" ABS and was calculated to meet up with the top of the riser. This ring is designed to distort when pressure rises inside the valve, forcing this ring to seal against the riser.

Our problem of weight was attacked by using lighter, but tough materials. ABS is always a good choice since it is tough, lightweight, can be easily shaped, and can be "welded" with ABS glue. ABS is not as strong as steel, so it would have to be redesigned for strength as a primary consideration.

A device was carefully designed to fit along the outside of the riser (a 2" ABS pipe cut in two lengthwise and shaped with heat to conform to the riser coupling). The two sections of the lengthwise pipe would clamp around the outside of the riser coupling. A precision-designed lip that would split into two parts, and grab the bottom edge of the riser coupling was "welded" inside the bottom of the clamping sections. This had to be designed and shaped carefully so that the immense upward pressure wouldn't translate into pushing the clamping sections outward, and thereby losing grip on the riser.

In addition to the precision of the clamping sections, we wanted the bottom of the clamping section to be conically shaped, to help direct the valve system over the riser. The cone would have to be very smooth to reduce the friction so that we would have enough power to push the valve over the riser. We would have to limit the power of the constricting band that pulls the two clamping jaws together, and forces the gripping rim to stay put. If the gripping pressure is too tight, we wouldn't be able to push it onto the riser, and if the gripping pressure is too loose, the clamping jaws might come loose or fail to grip entirely.

Installing a flat tab of metal that is wedge-shaped and bent to prop open the clamping mechanism provided a reasonable compromise. When the clamping device snaps shut, it ejects the tab out of the way of the riser, allowing us to use stronger pressure to clamp the mechanism onto the riser pipe.

Budget

Item	**Cost**
Camera Set-up (DVR, Cables, Adapters, Cameras, and Waterproofing Materials)	445.58

Frame Materials (Aluminum, High-Density Plastic, etc)	312.18
Wellhead Cap Materials	57.98
Tether Materials	55.91
Motor Control Materials (H-Bridges and Stamp modules)	367.97
Travel for Team	3000
Total Expenses	**$4,239.62**

Item	**Income**
Donation from Freeport McMoran	5000
Yavapai College Foundation Donation	4400
Initial Club Donation from Yavapai College	100
Total Donations	**$9,500.00**

Illustration 6: Camera Mishaps

Challenges and Lessons Learned

Our main challenge was time management. As a team we often felt like we were running to keep up. As a junior team and first-time competitors, we started from scratch at the beginning of the school year, but overall we count our qualification into the international competition as a win. We have learned many valuable lessons and are more prepared to tackle the challenges of next year's competition.

One of our more unique challenges was waterproofing the cameras. Our first attempt at waterproofing was flawless. We used spice containers, security cameras and fast-set epoxy. On our second attempt, using clear containers for a more professional looking camera, we made the first mistake of cracking the cases because they wouldn't fit in the containers. The cameras were irreparably damaged by the cases being removed. Our second try, with larger containers, we used slow-set epoxy (to avoid the heat build-up of fast-set epoxy), but the slow-set penetrated the camera casings and again damaged the cameras. In the end we went with our first set of waterproofed cameras.

Acknowledgments

The Yavapai College Robotics Team would like to thank the following people and corporations:

- Freeport McMoRan Copper and Gold Mine
- Batteries PLUS
- Prescott Valley Home Depot
- Whiskey Row Screenprinting and Ink & Ice Designs
- Chuck Allmon
- John Dibble
- The Yavapai College Foundation